Kia, THE COMPANY

Thank you for becoming the owner of a new Kia vehicle.

As a global car manufacturer focused on building high-quality, value for money prices, Kia Motors is dedicated to providing you with a customer service experience that exceeds your expectations.

At all of our Kia dealerships you will be treated with warmth, hospitality and professionalism by people who care based on our **"Family-like Care"** promise.

All information contained in this Owner's Manual was accurate at the time of publication. However, Kia reserves the right to make changes at any time so that our policy of continual product improvement can be carried out.

This manual applies to all trims of this vehicle and includes images, descriptions, and explanations of optional as well as standard equipment. As a result, some material in this manual may not be applicable to your specific Kia vehicle. Some images are shown for illustration only and may show features that differ from those on your vehicle.

Enjoy your vehicle and Kia's "Family-like Care" experience!

FOREWORD

Thank you for choosing a Kia vehicle.

This manual will familiarize you with operational, maintenance and safety information about your new vehicle. It is supplemented by a Warranty and Maintenance book that provides important information on all warranties regarding your vehicle. Kia urges you to read these publications carefully and follow the recommendations to help assure enjoyable and safe operation of your new vehicle.

Kia offers a great variety of options, components and features for its various models. Therefore, some of the equipment described in this manual, along with the various illustrations, may not be applicable to your particular vehicle.

The information and specifications provided in this manual were accurate at the time of printing. Kia reserves the right to discontinue or change specifications or design at any time without notice and without incurring any obligation. If you have questions, Kia recommends to check with an authorised Kia dealer/service partner.

Kia assures you of our continuing interest in your motoring pleasure and satisfaction in your Kia vehicle.

© 2019 Kia MOTORS Corp.

All rights reserved. Reproduction by any means, electronic or mechanical, including photocopying, recording, or by any information storage and retrieval system or translation in whole or part is not permitted without written authorization from Kia MOTORS Corporation.

Printed in Korea

TABLE OF CONTENTS

Introduction	1
Your vehicle at a glance	2
Safety features of your vehicle	3
Features of your vehicle	4
Audio system	5
Driving your vehicle	6
What to do in an emergency	7
Maintenance	8
Specifications & Consumer information	9
Index	I

Introduction

1

How to use this manual 1-2
Fuel requirements 1-3
• Petrol engine 1-3
Vehicle break-in process 1-6

HOW TO USE THIS MANUAL

We want to help you get the greatest possible driving pleasure from your vehicle. Your Owner's Manual can assist you in many ways. We strongly recommend that you read the entire manual. In order to minimise the chance of death or injury, you must read the WARNING and CAUTION sections in the manual.

Illustrations complement the words in this manual to best explain how to enjoy your vehicle. By reading your manual, you learn about features, important safety information, and driving tips under various road conditions.

The general layout of the manual is provided in the Table of Contents. Use the index when looking for a specific area or subject; it has an alphabetical listing of all information in your manual.

Sections: This manual has 9 sections plus an index. Each section begins with a brief list of contents so you can tell at a glance if that section has the information you want.

You will find various WARNINGs, CAUTIONs, and NOTICEs in this manual. These WARNINGs were prepared to enhance your personal safety. You should carefully read and follow ALL procedures and recommendations provided in these WARNINGs, CAUTIONs and NOTICEs.

⚠ WARNING

A WARNING indicates a situation in which harm, serious bodily injury or death could result if the warning is ignored.

⚠ CAUTION

A CAUTION indicates a situation in which damage to your vehicle could result if the caution is ignored.

✻ NOTICE

A NOTICE indicates interesting or helpful information is being provided.

FUEL REQUIREMENTS

Petrol engine

Unleaded

For Europe

For the optimal vehicle performance, we recommend you to use unleaded petrol with an octane rating of RON (Research Octane Number) 95 / AKI (Anti Knock Index) 91 or higher.

(Do not use methanol blended fuels.)

You may use unleaded petrol with an octane rating of RON 91~94 / AKI 87~90 but it may result in slight performance reduction of the vehicle.

Except Europe

Your new Kia vehicle is designed to use only unleaded fuel having an Octane Rating of RON (Research Octane Number) 91 / AKI (Anti-Knock Index) 87 or higher. (Do not use methanol blended fuels.)

Your new vehicle is designed to obtain maximum performance with UNLEADED FUEL, as well as minimise exhaust emissions and spark plug fouling.

⚠ CAUTION

NEVER USE LEADED FUEL. The use of leaded fuel is detrimental to the catalytic converter and will damage the engine control system's oxygen sensor and affect emission control.

Never add any fuel system cleaning agents to the fuel tank other than what has been specified. (Kia recommends to consult an authorised Kia dealer/service partner for details.)

⚠ WARNING

- **Do not "top off" after the nozzle automatically shuts off when refuelling.**
- **Always check that the fuel cap is installed securely to prevent fuel spillage in the event of an accident.**

Leaded (if equipped)

For some countries, your vehicle is designed to use leaded petrol. When you are going to use leaded petrol, Kia recommends to visit an authorised Kia dealer/service partner and ask whether leaded gasoline in your vehicle is available or not.

Octane Rating of leaded petrol is same with unleaded one.

Petrol containing alcohol and methanol

Gasohol, a mixture of petrol and ethanol (also known as grain alcohol), and petrol or gasohol containing methanol (also known as wood alcohol) are being marketed along with or instead of leaded or unleaded petrol.

Do not use gasohol containing more than 10% ethanol, and do not use petrol or gasohol containing any methanol. Either of these fuels may cause drivability problems and damage to the fuel system, engine control system and emission control system.

Discontinue using gasohol of any kind if drivability problems occur.

Vehicle damage or drivability problems may not be covered by the manufacturer's warranty if they result from the use of:

1. Gasohol containing more than 10% ethanol.
2. Petrol or gasohol containing methanol.
3. Leaded fuel or leaded gasohol.

⚠ CAUTION

Never use gasohol which contains methanol. Discontinue use of any gasohol product which impairs drivability.

Other fuels

Using fuels such as

- Silicone (Si) contained fuel,
- MMT (Manganese, Mn) contained fuel,
- Ferrocene (Fe) contained fuel, and
- Other metalic additives contained fuels,

may cause vehicle and engine damage or cause plugging, misfiring, poor acceleration, engine stalling, catalyst melting, abnormal corrosion, life cycle reduction, etc.

Also, the Malfunction Indicator Lamp (MIL) may illuminate.

✻ NOTICE

Damage to the fuel system or performance problem caused by the use of these fuels may not be covered by your New Vehicle Limited Warranty.

Use of MTBE

Kia recommends avoiding fuels containing MTBE (Methyl Tertiary Butyl Ether) over 15.0% vol. (Oxygen Content 2.7% weight) in your vehicle.

Fuel containing MTBE over 15.0% vol. (Oxygen Content 2.7% weight) may reduce vehicle performance and produce vapour lock or hard starting.

⚠ CAUTION

Your New Vehicle Limited Warranty may not cover damage to the fuel system and any performance problems that are caused by the use of fuels containing methanol or fuels containing MTBE (Methyl Tertiary Butyl Ether) over 15.0% vol. (Oxygen Content 2.7% weight.)

Do not use methanol

Fuels containing methanol (wood alcohol) should not be used in your vehicle. This type of fuel can reduce vehicle performance and damage components of the fuel system, engine control system and emission control system.

Fuel Additives

Kia recommends that you use unleaded petrol which has an octane rating of RON (Research Octane Number) 95 / AKI (Anti Knock Index) 91 or higher (for Europe) or Octane Rating of RON (Reasearch Octane Number) 91 / AKI (Anti-Knock Index) 87 or higher (except Europe).

For customers who do not use good quality gasolines including fuel additives regularly, and have problems starting or the engine does not run smoothly, one bottle of additives added to the fuel tank at every 15,000 km (10,000 miles) (For Europe, Australia and New Zealand (Non Turbo Model)) / 10,000 km (6,500 miles) (Except Europe, Australia and New Zealand (Non Turbo Model), China, Brazil) / 5,000 km (3,000 miles) (For China, Brazil).

Additives are available from a professional workshop along with information on how to use them. Kia recommends to visit an authorised Kia dealer/service partner. Do not mix other additives.

Operation in foreign countries

If you are going to drive your vehicle in another country, be sure to:

- Observe all regulations regarding registration and insurance.
- Determine that acceptable fuel is available.

VEHICLE BREAK-IN PROCESS

No special break-in period is needed. By following a few simple precautions for the first 1,000 km (600 miles) you may add to the performance, economy and life of your vehicle.

- Do not race the engine.
- Whilst driving, keep your engine speed (rpm, or revolutions per minute) within 3,000 rpm.
- Do not maintain a single speed for long periods of time, either fast or slow. Varying engine speed is needed to properly break-in the engine.
- Avoid hard stops, except in emergencies, to allow the brakes to seat properly.
- Don't tow a trailer during the first 2,000 km (1,200 miles) of operation.

Your vehicle at a glance

Exterior overview **2-2**
Interior overview **2-4**
Instrument panel overview **2-5**
Engine compartment **2-6**

EXTERIOR OVERVIEW

■ Front view



1. Bonnet 4-32
2. Head lamp (Features of your vehicle) ... 4-89
   Head lamp (Maintenance) 8-107
3. Front fog lamp
   (Features of your vehicle) 4-93
   Front fog lamp (Maintenance) 8-107
4. DRL lamp (Features of your vehicle) 4-95
   DRL lamp (Maintenance) 8-107
5. Wheel and tyre 8-72, 9-5
6. Outside rearview mirror 4-48
7. Sunroof 4-39
8. Front windscreen wiper blades
   (Features of your vehicle) 4-96
   Front windscreen wiper blades
   (Maintenance) 8-66
9. Windows 4-26
10. Radar type Autonomous Emergency
    Braking 6-58

❈ The actual shape may differ from the illustration.

OJA017001R

■ Rear view



1. Door locks 4-19
2. Fuel filler lid 4-35
3. Rear combination lamp (Maintenance) 8-108
4. High mounted stop lamp (Maintenance) 8-120
5. Tailgate 4-24
6. Antenna 5-2
7. Rearview camera 4-87
8. Rear parking assist system 4-83
9. Back up lamp (Maintenance) 8-108
   Rear fog lamp (Maintenance) 8-108
10. Rear window wiper blade (Features of your vehicle) 4-99
    Rear window wiper blade (Maintenance) 8-67

❈ The actual shape may differ from the illustration.

OJA016002

INTERIOR OVERVIEW

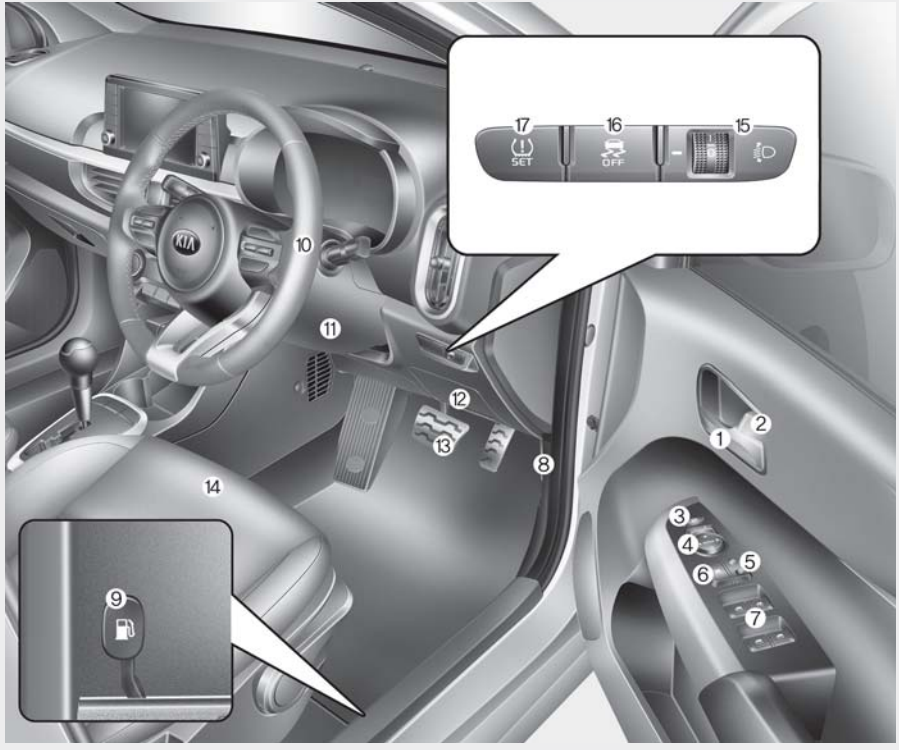

1. Inside door handle 4-20
2. Door lock/unlock button 4-20
3. Outside rearview mirror folding switch 4-49
4. Outside rearview mirror control switch 4-49
5. Central door lock switch.....4-21
6. Power window lock button 4-30
7. Power window switches 4-27
8. Bonnet release lever.....4-32
9. Fuel filler lid release lever.....4-35
10. Steering wheel.....4-44
11. Steering wheel tilt control 4-45
12. Inner fuse panel.....8-87
13. Brake pedal.....6-34
14. Seat.....3-2
15. Headlight levelling device 4-95
16. ESC OFF button 6-41
17. TPMS SET switch 7-9

❈ The actual shape may differ from the illustration.

OJA017003R

INSTRUMENT PANEL OVERVIEW



1. Instrument cluster....4-51
2. Horn 4-46
3. Driver's front air bag....3-55
4. Wiper / Washer (For Europe) 4-96
   Light control/Turn signals (Except Europe) 4-89
5. Light control/Turn signals (For Europe)....4-89
   Wiper / Washer (Except Europe) 4-96
6. Ignition switch....6-6
   ENGINE START/STOP button 6-10
7. LCD window control 4-53
   Cruise control....6-49
   Speed limit control 6-55
8. Steering wheel audio control....5-13
9. Hazard warning flasher switch 7-2
10. Audio 5-7
11. Manual climate control system....4-104
    Automatic climate control system.4-115
12. Cigarette lighter....4-135
13. AUX, USB port 5-3
14. Power outlet 4-139
15. Passenger's front air bag 3-55
16. Glove box 4-132
17. Shift lever M/T 6-23
    Shift lever A/T....6-27
18. Seat warmer....4-137
19. ISG (Idle Stop and Go) button 6-18
20. Heated steering wheel switch 4-45
21. Centre console storage....4-131
22. Cup holder....4-136

OJA017004R

ENGINE COMPARTMENT

■ **Kappa 1.0L MPI Engine (Petrol)**

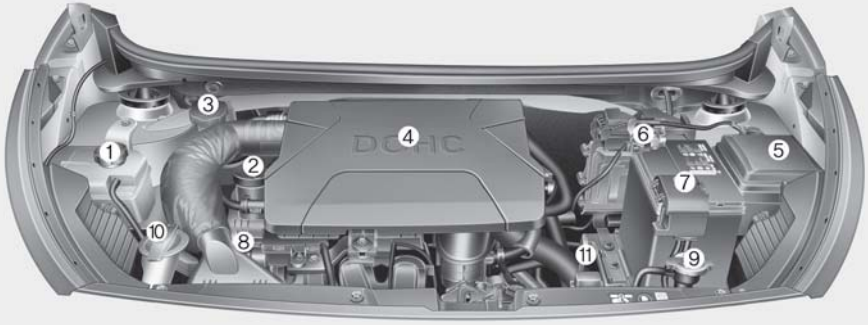

■ **Kappa 1.2L MPI Engine (Petrol)**

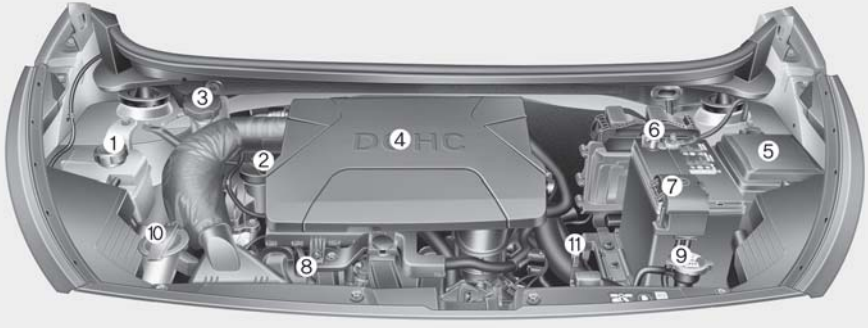

1. Engine coolant reservoir.....8-44
2. Engine oil filler cap 8-43
3. Brake/clutch fluid reservoir 8-52
4. Air cleaner 8-59
5. Fuse box.....8-88
6. Negative battery terminal 8-68
7. Positive battery terminal 8-68
8. Engine oil dipstick.....8-42
9. Radiator cap 8-46
10. Windscreen washer fluid reservoir..8-57
11. Automatic transaxle fluid dipstick ..8-54

❈ The actual engine room in the vehicle may differ from the illustration.

OJA077001R/OJA077003R

■ **Kappa 1.0L T-GDI Engine (Petrol)**



1. Engine coolant reservoir.....8-48
2. Engine oil filler cap 8-43
3. Brake/clutch fluid reservoir 8-52
4. Air cleaner 8-61
5. Fuse box.....8-88
6. Negative battery terminal 8-68
7. Positive battery terminal 8-68
8. Engine oil dipstick.....8-42
9. Radiator cap 8-50
10. Windscreen washer fluid reservoir..8-57
11. Automatic transaxle fluid dipstick ..8-54

❈ The actual engine room in the vehicle may differ from the illustration.

OJA077091R

■ **Kappa 1.0L MPI Engine (FFV)**

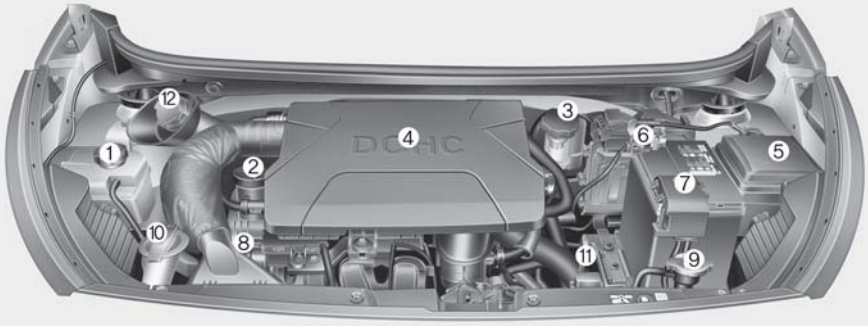

1. Engine coolant reservoir.....8-44
2. Engine oil filler cap 8-43
3. Brake / clutch fluid reservoir.....8-52
4. Air cleaner 8-59
5. Fuse box.....8-88
6. Negative battery terminal 8-68
7. Positive battery terminal 8-68
8. Engine oil dipstick.....8-42
9. Radiator cap 8-46
10. Windscreen washer fluid reservoir..8-57
11. Automatic transaxle fluid dipstick ..8-54
12. Petrol reservoir 4-36

❈ The actual engine room in the vehicle may differ from the illustration.

OJA077001

Safety features of your vehicle

Seats 3-2
- Front seat adjustment 3-6
- Headrest 3-7
- Seatback pocket 3-10
- Rear seat adjustment 3-11

Seat belts 3-16
- Seat belt restraint system 3-16
- Pre-tensioner seat belt 3-24
- Seat belt precautions 3-27
- Care of seat belts 3-30

Child restraint system (CRS) 3-31
- Selecting a Child Restraint System (CRS) 3-32
- Installing a Child Restraint System (CRS) 3-34
- ISOFIX anchorage and top-tether anchorage (ISOFIX anchorage system) for children 3-35

Air bag - supplemental restraint system 3-46
- How does the air bag system operate 3-47
- Air bag warning light 3-50
- SRS components and functions 3-52
- Driver's and passenger's front air bag 3-55
- Side air bag 3-61
- Curtain air bag 3-63
- Inflation and non-inflation conditions of the air bag 3-65
- SRS Care 3-70
- Additional safety precautions 3-71
- Air bag warning label 3-73

SEATS

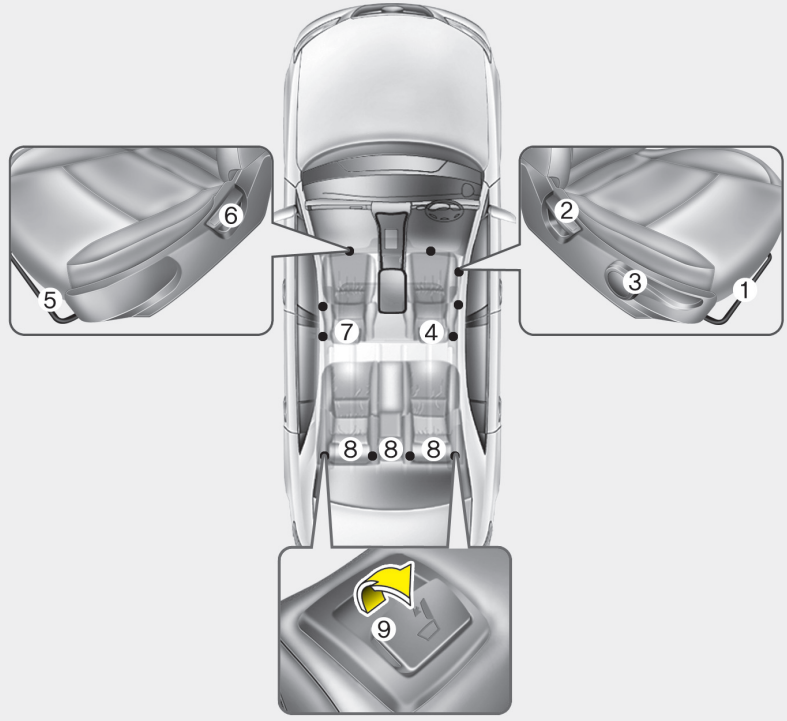

❈ The actual seats in the vehicle may differ from the illustration.

OJA037001R

Driver's seat

(1) Forward and backward
(2) Seatback angle
(3) Seat cushion height*
(4) Headrest

Front passenger's seat

(5) Forward and backward
(6) Seatback angle
(7) Headrest

Rear seat

(8) Headrest*
(9) Seatback folding*

* : if equipped

⚠ WARNING - Loose objects

Loose objects in the driver's foot area could interfere with the operation of the foot pedals, possibly causing an accident. Do not place anything under the front seats.

⚠ WARNING - Uprighting seat

When you return the seatback to its upright position, hold the seatback and return it slowly and be sure there are no other occupants around the seat. If the seatback is returned without being held and controlled, the back of the seat could spring forward resulting in accidental injury to a person struck by the seatback.

⚠ WARNING - Driver responsibility for passengers

Riding in a vehicle with the seatback reclined could lead to serious or fatal injury in an accident. If a seat is reclined during an accident, the occupant's hips may slide under the lap portion of the seat belt, applying great force to the unprotected abdomen. Serious or fatal internal injuries could result. The driver must advise the passenger to keep the seatback in an upright position whenever the vehicle is in motion.

⚠ WARNING

Do not use a sitting cushion that reduces friction between the seat and passenger. The passenger's hips may slide under the lap portion of the seat belt during an accident or a sudden stop. Serious or fatal internal injuries could result because the seat belt can't operate normally.

⚠ WARNING - Driver's seat

- **Never attempt to adjust the seat whilst the vehicle is moving. This could result in loss of control, and an accident causing death, serious injury, or property damage.**
- **Do not allow anything to interfere with the normal position of the seatback. Storing items against a seatback or in any other way interfering with proper locking of a seatback could result in serious or fatal injury in a sudden stop or collision.**
- **Always drive and ride with your seatback upright and the lap portion of the seat belt snug and low across the hips. This is the best position to protect you in case of an accident.**

(Continued)

(Continued)

- **In order to avoid unnecessary and perhaps severe air bag injuries, always sit as far back as possible from the steering wheel whilst maintaining comfortable control of the vehicle. We recommend that your chest be at least 250 mm (10 inches) away from the steering wheel.**

⚠ WARNING - Rear seatbacks

- **The rear seatback must be securely latched. If not, passengers and objects could be thrown forward resulting in serious injury or death in the event of a sudden stop or collision.**
- **Luggage and other cargo should be laid flat in the cargo area. If objects are large, heavy, or must be piled, they must be secured. Under no circumstances should cargo be piled higher than the seatbacks. Failure to follow these warnings could result in serious injury or death in the event of a sudden stop, collision or rollover.**
- **No passenger should ride in the cargo area or sit or lie on folded seatbacks whilst the vehicle is moving. All passengers must be properly seated in seats and restrained properly whilst riding.**

(Continued)

(Continued)

- **When resetting the seatback to the upright position, make sure it is securely latched by pushing it forward and backwards.**
- **To avoid the possibility of burns, do not remove the carpet in the cargo area. Emission control devices beneath this floor generate high temperatures.**

⚠ WARNING

After adjusting the seat, always check that it is securely locked into place by attempting to move the seat forward or backward without using the lock release lever. Sudden or unexpected movement of the driver's seat could cause you to lose control of the vehicle resulting in an accident.

⚠ WARNING

- **Use extreme caution so that hands or other objects are not caught in the seat mechanisms whilst the seat is moving.**
- **Do not put a cigarette lighter on the floor or seat. When you operate the seat, gas may gush out of the lighter and cause fire.**
- **If there are occupants in the rear seats, be careful whilst adjusting the front seat position.**
- **Use extreme caution when picking small objects trapped under the seats or between the seat and the centre console. Your hands might be cut or injured by the sharp edges of the seat mechanism.**

⚠ CAUTION - Precautions with seat covers

- ***Use caution when working on the seat cover. A short circuit or disconnection may occur, which could lead to noise, damage the ventilation system, and possible fire.***
- ***Be aware of wires or air vents when placing a seat cover or covering the seat with plastic cover. A short circuit may occur, which could lead to fire.***

Feature of Seat Leather

- Leather is made from the outer skin of an animal, which goes through a special process to be available for use. Since it is a natural substance, each part differs in thickness or density.

  Wrinkles may appear as a natural result of stretching and shrinking depending on the temperature and humidity.
- The seat is made of stretchable fabric to improve comfort.
- The parts contacting the body are curved and the side supporting area is high which provides driving comfort and stability.
- Wrinkles may appear naturally from usage. It is not a fault of the product.

⚠ CAUTION

- ***Wrinkles or abrasions which appear naturally from usage are not covered by warranty.***
- ***Belts with metallic accessories, zippers or keys inside the back pocket may damage the seat fabric.***
- ***Make sure not to wet the seat. It may change the nature of natural leather.***
- ***Jeans or clothes which could bleach may contaminate the surface of the seat covering fabric.***

Front seat adjustment

Forward and backward

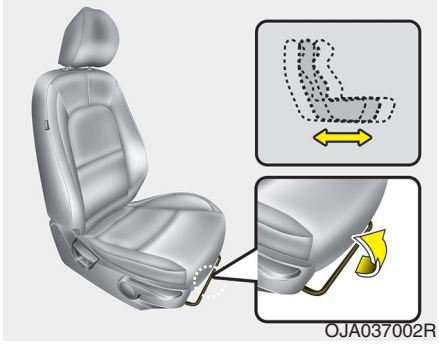

OJA037002R

To move the seat forward or backward:

1. Pull the seat slide adjustment lever up and hold it.
2. Slide the seat to the position you desire.
3. Release the lever and make sure the seat is locked in place.

Adjust the seat before driving, and make sure the seat is locked securely by trying to move forward and rearward without using the lever. If the seat moves, it is not locked properly.

Seatback angle

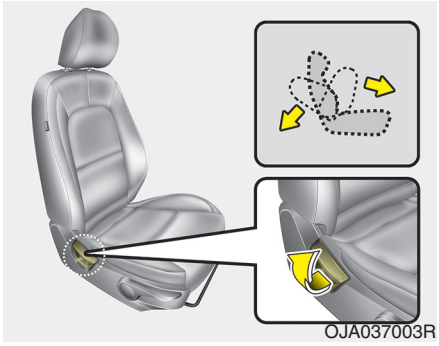
OJA037003R

To recline the seatback:

1. Lean forward slightly and lift up on the seatback recline lever.
2. Carefully lean back on the seat and adjust the seatback of the seat to the position you desire.
3. Release the lever and make sure the seatback is locked in place. (The lever MUST return to its original position for the seatback to lock.)

Seat cushion height (if equipped, for driver's seat)

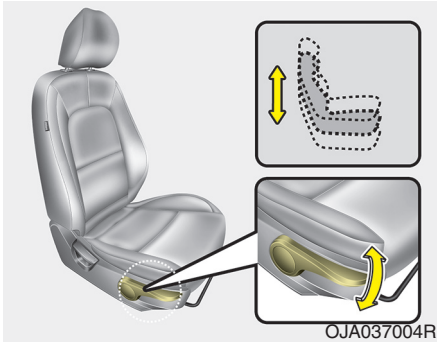
OJA037004R

To change the height of the seat cushion, push the lever that is located on the outside of the seat cushion upwards or downwards.

- To lower the seat cushion, push the lever down several times.
- To raise the seat cushion, pull the lever up several times.

Headrest

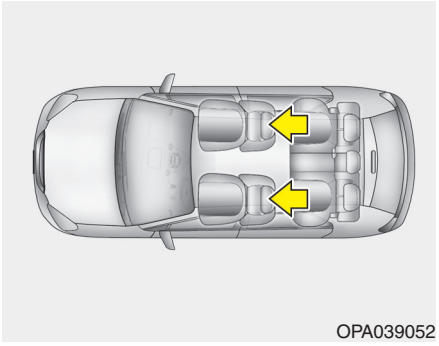
OPA039052

The driver's and front passenger's seats are equipped with a headrest for the occupant's safety and comfort.

The headrest not only provides comfort for the driver and front passenger, but also helps to protect the head and neck in the event of a collision.

⚠ WARNING

- **For maximum effectiveness in case of an accident, the headrest should be adjusted so the middle of the headrest is at the same height as the centre of gravity of an occupant's head.**

  Generally, the centre of gravity of most people's head is similar with the height of the top of their eyes. Also, adjust the headrest as close to your head as possible. For this reason, the use of a cushion that holds the body away from the seatback is not recommended.
- **Do not operate the vehicle with the headrests removed as severe injury to the occupants may occur in the event of an accident. Headrests may provide protection against neck injuries when properly adjusted.**
- **Do not adjust the headrest position of the driver's seat whilst the vehicle is in motion.**

⚠ CAUTION

When there is no occupant in the rear seats, adjust the height of the headrest to the lowest position. The rear seat headrest can reduce the visibility of the rear area.

Adjusting the height up and down

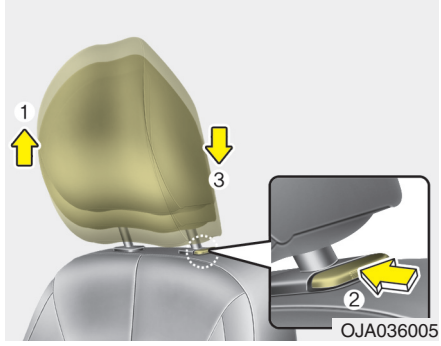

To raise the headrest, pull it up to the desired position (1). To lower the headrest, push and hold the release button (2) on the headrest support and lower the headrest to the desired position (3).

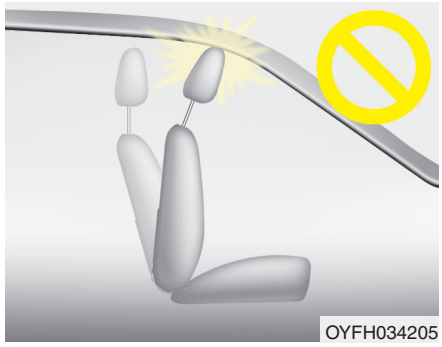

⚠ CAUTION

If you recline the seatback towards the front with the headrest and seat cushion raised, the headrest may come in contact with the sunvisor or other parts of the vehicle.

Removal and installation

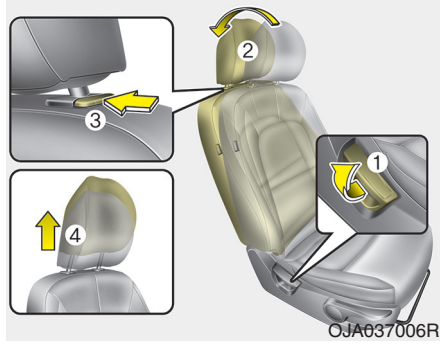

To remove the headrest:

1. Recline the seatback (2) with the recline lever (1).
2. Raise headrest as far as it can go.
3. Press the headrest release button (3) whilst pulling the headrest up (4).

⚠ WARNING

NEVER allow anyone to ride in a seat with the headrest removed.

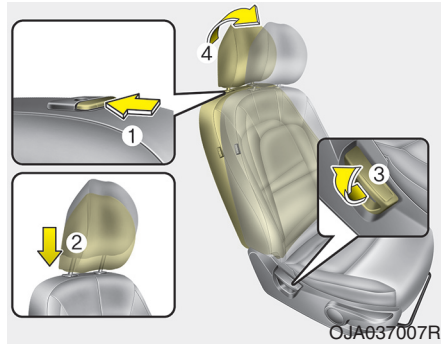

To reinstall the headrest :

1. Put the headrest poles (2) into the holes whilst pressing the release button (1).
2. Recline the seatback (4) with the recline lever (3).
3. Adjust the headrest to the appropriate height.

⚠ WARNING

Always make sure the headrest locks into position after reinstalling and adjusting it properly.

Forward and backward adjustment (if equipped)

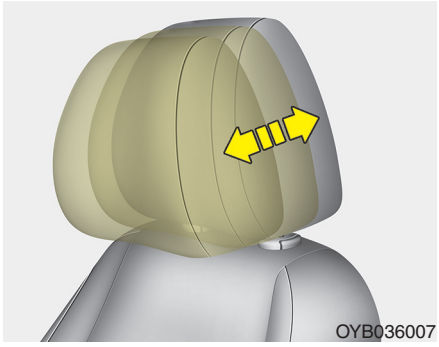

The headrest may be adjusted forward to 4 different positions by pulling the headrest forward to the desired detent. To adjust the headrest to it's rearmost position, pull it fully forward to the foremost position and release it. Adjust the headrest so that it properly supports the head and neck.

⚠ WARNING

A gap between the seat and the headrest release button may appear when seating on the seat or when you push or pull the seat. Be careful not to get your finger, etc. caught in the gap.

Seatback pocket (if equipped)

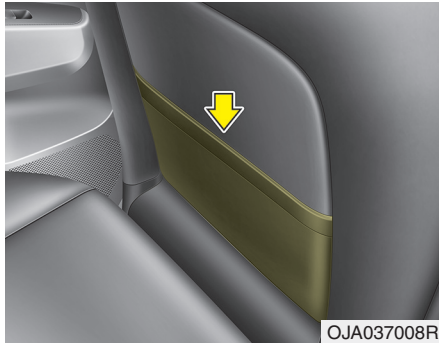

The seatback pocket is provided on the back of the front passenger's seatback.

⚠ WARNING - Seatback pockets

Do not put heavy or sharp objects in the seatback pockets. In an accident they could come loose from the pocket and injure vehicle occupants.

Rear seat adjustment

Headrest (if equipped)

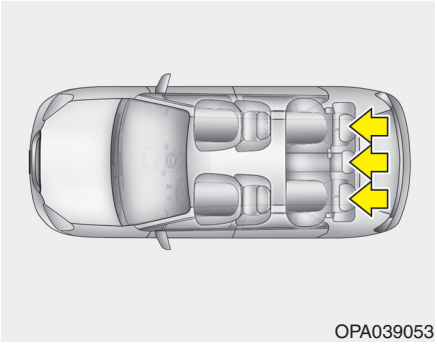

OPA039053

The rear seat is equipped with headrests for the occupant's safety and comfort.

The headrest not only provides comfort for passengers, but also helps to protect the head and neck in the event of a collision.

⚠ WARNING

- **For maximum effectiveness in case of an accident, the headrest should be adjusted so the middle of the headrest is at the same height as the centre of gravity of an occupant's head. Generally, the centre of gravity of most people's head is similar with the height of the top of their eyes. Also adjust the headrest as close to your head as possible. For this reason, the use of a cushion that holds the body away from the seatback is not recommended.**
- **Do not operate the vehicle with the headrests removed. Severe injury to an occupant may occur in the event of an accident. Headrests may provide protection against severe neck injuries when properly adjusted.**

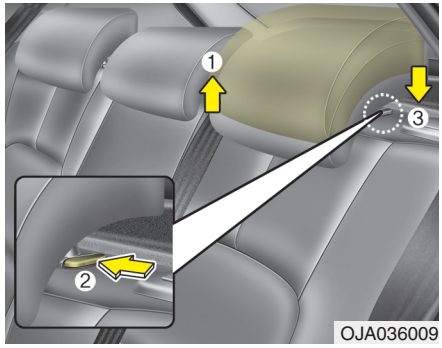

OJA036009

Adjusting the height up and down (if equipped)

To raise the headrest, pull it up to the desired position (1). To lower the headrest, push and hold the release button (2) on the headrest support and lower the headrest to the desired position (3).

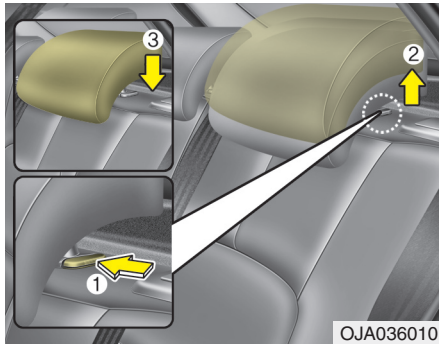

Removal and installation (if equipped)

To remove the headrest, raise it as far as it can go then press the release button (1) whilst pulling upward (2).

To reinstall the headrest, put the headrest poles (3) into the holes whilst pressing the release button (1). Then adjust it to the appropriate height.

⚠ WARNING

Make sure the headrest locks in position after adjusting it to properly protect the occupants.

Folding the rear seat (if equipped)

The rear seatbacks may be folded to facilitate carrying long items or to increase the luggage capacity of the vehicle.

⚠ WARNING

The purpose of the fold-down rear seatbacks is to allow you to carry longer objects than could not otherwise be accommodated.

Never allow passengers to sit on top of the folded down seatback whilst the car is moving as this is not a proper seating position and no seat belts are available for use. This could result in serious injury or death in case of an accident or sudden stop. Objects carried on the folded down seatback should not extend higher than the top of the front seats. This could allow cargo to slide forward and cause injury or damage during sudden stops.

The rear seatbacks may be folded forward to provide additional cargo space and to provide access to the cargo area.

- To raise the seatback, lift and push it firmly until it clicks into place.
- When you return the seatback to its upright position, reposition the rear safety belts so that they can be used by rear seat passengers.

⚠ WARNING

Do not fold the rear seat, if the driver's position is not properly set according to the driver's physical figure after folding the rear seat. A sudden stop or collision may cause injury.

⚠ CAUTION

- ***When folding or unfolding the rear seat, make sure to move the front seat fully forward. If there is not enough space to fold the rear seat, never fold it by force. It will cause damage to the headrest or the related parts of the seat.***
- ***Before using the seat belt, be sure to remove it from the holes located on both sides of seat back. If you pull out the seat belt whilst it's in the holes, it may damage the seat belt or the holes.***
- ***Use the holes only when there is no passengers in the rear seat or when you need to fold the rear seat.***

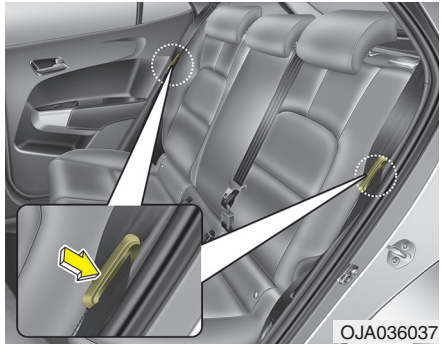

To fold down the rear seatback:

1. When folding the seat back, insert the rear seat belt buckle in the pocket between the rear seatback and cushion then make sure both seatbelts do not interfere with stowed luggage and cargo. Then, insert the seat belt into the two holes located on both sides.
2. Set the front seatback to the upright position and if necessary, slide the front seat forward.
3. Lower the rear headrests to lowest position.

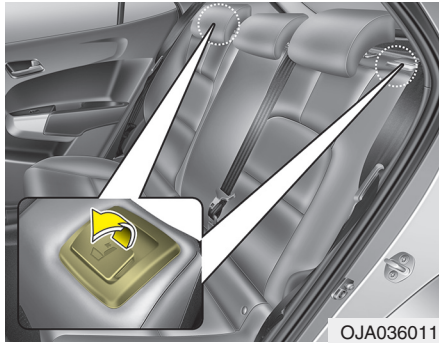

4. Pull the lock release lever and fold the rear seatback forward and down firmly.

To unfold the rear seat :

1. To use the rear seat, lift and pull the seatback backward. Pull the seatback firmly until it clicks into place. Make sure the seatback is locked in place. When you return the seatback to its upright position, always be sure it has locked into position by pushing on the top of the seatback.

   If you can not see the red line at the side of folding lever, it means the seatback is locked completely.
2. Return the rear seat belt to the proper position.
3. When the seatback is completely installed, check the seatback folding lever again.

⚠ WARNING - Uprighting seat

When you return the seatback to its upright position, hold the seatback and return it slowly. If the seatback is returned without holding it, the back of the seat could spring forward resulting in injury caused by being struck by the seatback.

⚠ WARNING

After folding the rear seat, unless the driver's position is properly set according to the driver's physical figure, do not fold the rear seat. It may increase body injuries in a sudden stop or collision.

⚠ WARNING

When you return the rear seatback to its upright position after being folded down:

Be careful not to damage the seat belt webbing or buckle. Do not allow the seat belt webbing or buckle to get caught or pinched in the rear seat. Ensure that the seatback is completely locked into its upright position by pushing on the top of the seatback. Otherwise, in an accident or sudden stop, the seat could fold down and allow cargo enter the passenger compartment, which could result in serious injury or death.

⚠ CAUTION - Damaging rear seat belt buckles

When you fold the rear seatback, insert the buckle between the rear seatback and cushion. Doing so can prevent the buckle from being damaged by the rear seatback.

⚠ CAUTION - Rear seat belts

When returning the rear seatbacks to the upright position, remember to return the rear shoulder belts to their proper position.

⚠ WARNING - Cargo

Cargo should always be secured, to prevent injury to the vehicle occupants, in case of a sudden stop or a collision. Do not place objects in the rear seats, since they cannot be properly secured and may hit the front seat occupants in a collision.

⚠ WARNING - Cargo loading

Make sure the engine is off, the automatic transaxle is in P (Park) or the manual transaxle is in 1st, and the parking brake is securely applied whenever loading or unloading cargo. Failure to take these steps may allow the vehicle to move if the shift lever is inadvertently moved to another position.

SEAT BELTS

Seat belt restraint system

⚠ WARNING

- For maximum restraint system protection, the seat belts must always be used whenever the car is moving.
- Seat belts are most effective when seatbacks are in the upright position.
- Children age 12 and younger must always be properly restrained in the rear seat. Never allow children to ride in the front passenger seat. If a child over 12 must be seated in the front seat, he/she must be properly belted and the seat should be moved as far back as possible.

(Continued)

(Continued)

- Never wear the shoulder belt under your arm or behind your back. An improperly positioned shoulder belt can cause serious injuries in a crash. The shoulder belt should be positioned midway over your shoulder across your collarbone.
- Never wear a seat belt over fragile objects. If there is a sudden stop or impact, the seat belt can damage it.
- Avoid wearing twisted seat belts. A twisted belt can't do its job as well. In a collision, it could even cut into you. Be sure the belt webbing is straight and not twisted.
- Be careful not to damage the belt webbing or hardware. If the belt webbing or hardware is damaged, replace it.

⚠ WARNING - Australia design rules

Seat belts are designed to bear upon the bony structure of the body, and should be worn low across the front of the pelvis or the pelvis, chest and shoulders, as applicable; wearing the lap section of the belt across the abdominal area must be avoided.

Seat belts should be adjusted as firmly as possible, consistent with comfort, to provide the protection for which they have been designed.

A slack belt will greatly reduce the protection afforded to the wearer.

(Continued)

(Continued)

Care should be taken to avoid contamination of the webbing with polishes, oils and chemicals, and particularly battery acid. Cleaning may safely be carried out using mild soap and water. The belt should be replaced if webbing becomes frayed, contaminated or damaged. It is essential to replace the entire assembly after it has been worn in a severe impact even if damage to the assembly is not obvious. Belts should not be worn with straps twisted. Each belt assembly must only be used by one occupant; it is dangerous to put a belt around a child being carried on the occupant's lap.

⚠ WARNING - Australia design rules

- **No modifications or additions should be made by the user which will either prevent the seat belt adjusting devices from operating to remove slack, or prevent the seat belt assembly from being adjusted to remove slack.**
- **When you fasten the seat belt, be careful not to latch the seat belt in buckles of other seat. It's very dangerous and you may not be protected by the seat belt properly.**
- **Do not unfasten the seat belt and do not fasten and unfasten the seat belt repeatedly whilst driving. This could result in loss of control, and an accident causing death, serious injury, or property damage.**

(Continued)

(Continued)

- **When fastening the seat belt, make sure that the seat belt does not pass over objects that are hard or can break easily.**
- **Make sure there is nothing in the buckle. The seat belt may not be fastened securely.**



Front seat belt warning (if equipped)

As a reminder to the front seat belt, the front seat belt warning lights will illuminate for approximately 6 seconds each time you turn the ignition switch ON regardless of belt fastening.

If you do not fasten the seat belt and you drive under 20km/h, the warning light will illuminate until the belt is fastened.

If you do not fasten the seat belt and you drive over 20km/h the seat belt warning chime will sound for approximately 100 seconds and the corresponding warning light will blink.

If you unfasten the seat belt whilst driving under 20km/h the seat belt warning light will illuminate until the seat belt is fastened.

⚠ WARNING

Riding in an improper position adversely affects the front seat belt warning system. It is important for the driver to instruct the passenger to properly be seated as instructed in this manual.

✻ NOTICE

- Front passenger`s seat belt warning(if equipped)

- **You can find the front passenger's seat belt warning light on the centre fascia panel.**
- **Although the front passenger seat is not occupied, the seat belt warning light will blink or illuminate for 6 seconds.**
- **The front passenger's seat belt warning may operate when luggage is placed on the front passenger seat.**

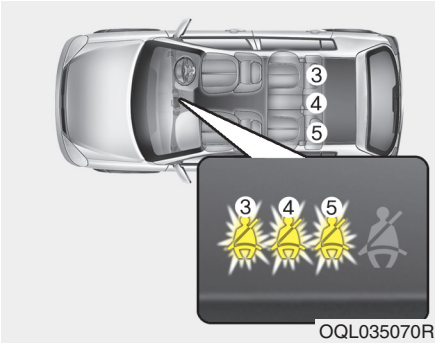

Rear passenger's seat belt warning (if equipped)

As a reminder to the rear seat belt, the rear seat belt warning lights will illuminate for approximately 6 seconds each time you turn the ignition switch ON regardless of belt fastening.

And then, the rear corresponding seat belt warning light will illuminate for approximately 35 seconds, if any of following occurs;

- You start the engine when the rear belt is not fastened.
- You drive over 9km/h when the rear belt is not fastened.
- The rear belt is disconnected when driving under 20km/h.

If the rear seat belt is fastened, the warning light will turn off immediately.

If the rear seat belt is disconnected when you drive over the 20km/h, the corresponding seat belt warning light will blink and warning chime will sound for 35 seconds.

But, if the rear passenger's lap/shoulder belt is/are connected and disconnected twice within 9 seconds after the belt is fastened, the corresponding seat belt warning light will not operate.

Lap/Shoulder belt

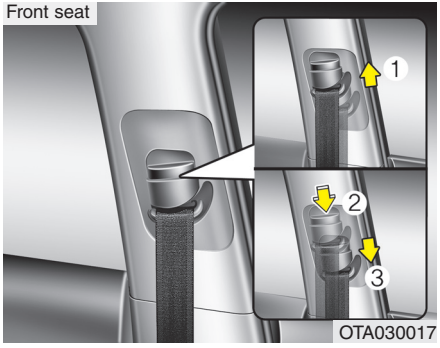

Height adjustment (front seat, if equipped)

You can adjust the height of the shoulder belt anchor to one of the 3 positions for maximum comfort and safety.

The height of the adjusting seat belt should not be too close to your neck. The shoulder portion should be adjusted so that it lies across your chest and midway over your shoulder near the door and not your neck.

To adjust the height of the seat belt anchor, lower or raise the height adjuster into an appropriate position.

To raise the height adjuster, pull it up (1). To lower it, push it down (3) whilst pressing the height adjuster button (2).

Release the button to lock the anchor into position. Try sliding the height adjuster to make sure that it has locked into position.

Improperly positioned seat belts can cause serious injuries in an accident.

⚠ WARNING

- **Verify the shoulder belt anchor is locked into position at the appropriate height. Never position the shoulder belt across your neck or face.**
- **Failure to replace seat belts after an accident could leave you with damaged seat belts that will not provide protection in the event of another collision leading to personal injury or death. Replace your seat belts after being in an accident as soon as possible.**

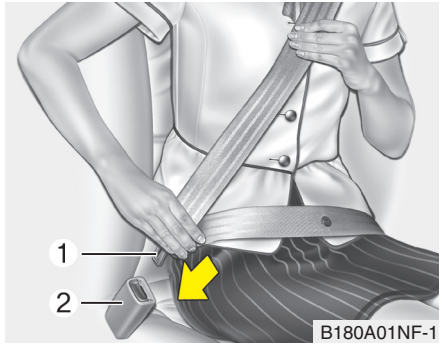

To fasten your seat belt:

To fasten your seat belt, pull it out of the retractor and insert the metal tab (1) into the buckle (2). There will be an audible "click" when the tab locks into the buckle.

The seat belt automatically adjusts to the proper length only after the lap belt portion is adjusted manually so that it fits snugly around your hips. If you lean forward in a slow, easy motion, the belt will extend and let you move around. If there is a sudden stop or impact, however, the belt will lock into position. It will also lock if you try to lean forward too quickly.

✻ NOTICE

If you are not able to pull out the seat belt from the retractor, firmly pull the belt out and release it. Then you will be able to pull the belt out smoothly.

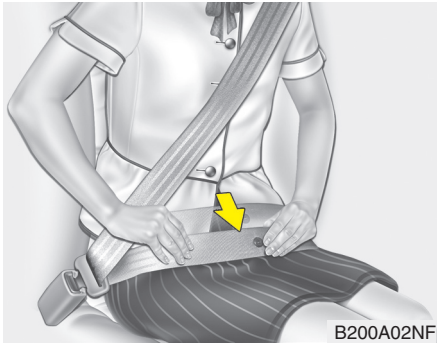

⚠ WARNING

You should place the lap belt portion as low as possible and snugly across your hips, not on your waist. If the lap belt is located too high on your waist, it may increase the chance of injury in the event of a collision. Both arms should not be under or over the belt. Rather, one should be over and the other under, as shown in the illustration.

Never wear the seat belt under the arm nearest the door.

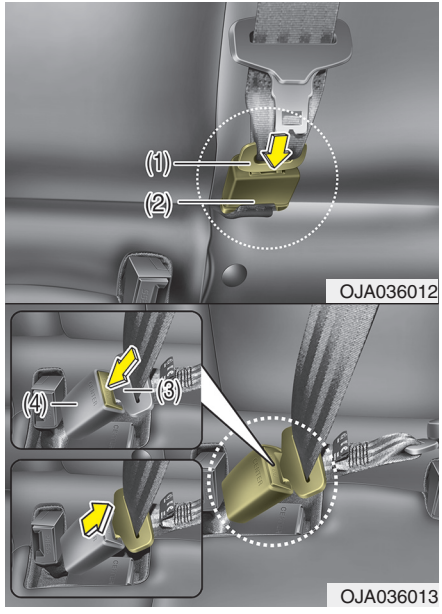

Rear centre seatbelt :

Always keep the plate (1) and buckle (2) locked. Pull the metal tab (3) and insert it (3) into the buckle (4). There will be an audible “click” when the tab locks into the buckle. Make sure the belt is not twisted.

When using the rear centre seat belt the buckle with the “CENTRE” mark must be used.

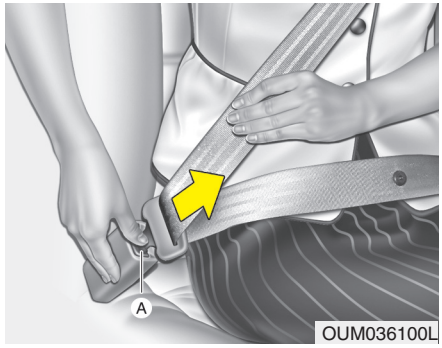

To release the seat belt:

The seat belt is released by pressing the release button (A) on the locking buckle. When it is released, the belt should automatically draw back into the retractor.

If this does not happen, check the belt to be sure it is not twisted, then try again.

Lap belt (if equipped)

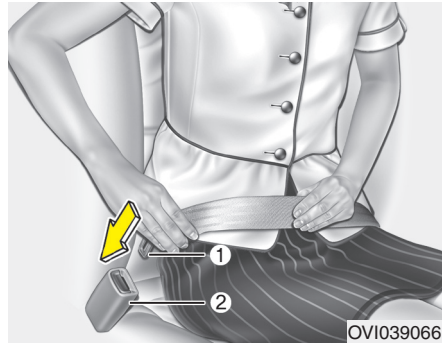

To fasten your seat belt:

To fasten a 2-point static type belt, insert the metal tab (1) into the locking buckle (2). There will be an audible "click" when the tab locks into the buckle. Check to make sure the belt is properly locked and that the belt is not twisted.

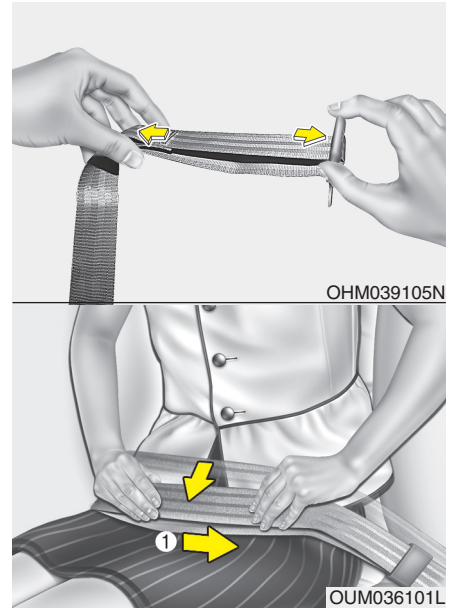

With a 2-point static type seat belt, the length must be adjusted manually so it fits snugly around your body. Fasten the belt and pull on the loose end to tighten.

The belt should be placed as low as possible on your hips (1), not on your waist. If the belt is too high, it could increase the possibility of your being injured in an accident.

When using the rear centre seat belt, the buckle with the “CENTRE” mark must be used.

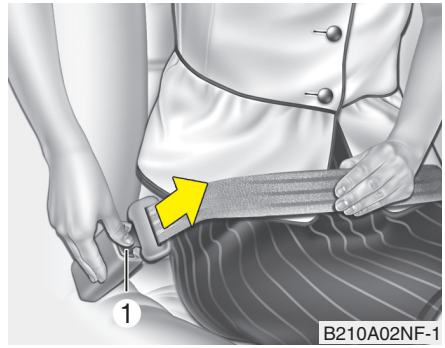

To release the seat belt:

When you want to release the seat belt, press the button (1) in the locking buckle.

⚠ WARNING

The centre lap belt latching mechanism is different from those for the rear seat shoulder belts. When fastening the rear seat shoulder belts or the centre lap belt, make sure they are inserted into the correct buckles to obtain maximum protection from the seat belt system and assure proper operation.

Stowing the rear seat belt

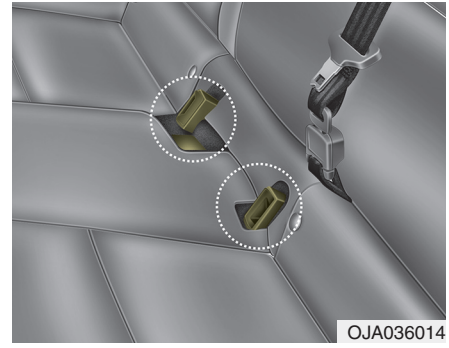

The rear seat belt buckles can be stowed in the pocket between the rear seatback and cushion when not in use.

Pre-tensioner seat belt (if equipped)



Your vehicle is equipped with pre-tensioner seatbelts at the front and rear outboard seating positions EFD (Emergency Fastening Device) is equipped with driver`s seat belt.

The purpose of the pre-tensioner is to make sure that the seat belts fit tightly against the occupant's body in certain collisions. The pre-tensioner seat belts may be activated in crashes where the collision is severe enough.

When the vehicle stops suddenly, or if the occupant tries to lean forward too quickly, the seat belt retractor will lock into position. In certain frontal collisions, the pre-tensioner will activate and pull the seat belt into tighter contact against the occupant's body.

(1) Retractor Pretensioner

The purpose of the retractor pretensioner is to make sure that the shoulder belts fit in tightly against the occupant's upper body in certain frontal collisions.

(2) EFD (Emergency Fastening Device, for driver`s seat belt)

The purpose of the EFD is to make sure that the pelvis belts fit in tightly against the occupant's lower body in certain frontal collisions. (if equipped)

If the system senses excessive tension on the driver or passenger's seat belt when the pre-tensioner activates, the load limiter inside the pre-tensioner will release some of the pressure on the affected seat belt. (if equipped)

⚠ WARNING

For your safety, be sure that the belt webbing is not loose or twisted and always sit properly on your seat.

✻ NOTICE - if equipped with rollover sensor

The pre-tensioner will activate not only in a frontal collision but also in a side collision or rollover, if the vehicle is equipped with a side or curtain air bag.

✻ NOTICE - without rollover sensor

The pre-tensioner will activate not only in a frontal collision but also in a side collision, if the vehicle is equipped with a side or curtain air bag.

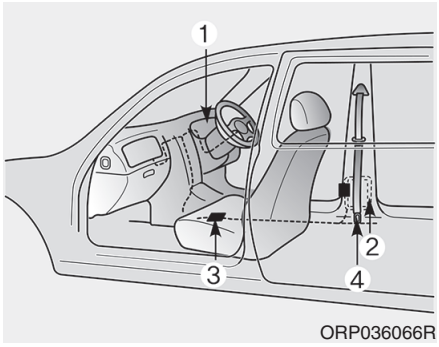

ORP036066R

The seat belt pre-tensioner system consists mainly of the following components. Their locations are shown in the illustration:

1. SRS air bag warning light
2. Retractor pre-tensioner assembly
3. SRS control module
4. Emergency fastening device (EFD)*

* : if equipped

⚠ WARNING

To obtain maximum benefit from a pre-tensioner seat belt:

1. The seat belt must be worn correctly and adjusted to the proper position. Please read and follow all of the important information and precautions about your vehicle's occupant safety features – including seat belts and air bags – that are provided in this manual.

2. Be sure you and your passengers always wear seat belts properly.

✻ NOTICE

- **Pre-tensioners equipped at the front and rear outboard seating positions will be activated in certain collisions. The pre-tensioner seat belts can be activated, where the collision is severe enough, together with the air bags.**
- **When the pre-tensioner seat belts are activated, a loud noise may be heard and fine dust, which may appear to be smoke, may be visible in the passenger compartment. These are normal operating conditions and are not hazardous.**
- **Although it is harmless, the fine dust may cause skin irritation and should not be breathed for prolonged periods. Wash all exposed skin areas thoroughly after an accident in which the pre-tensioner seat belts were activated.**
- **Because the sensor that activates the SRS air bag is connected with the pre-tensioner seat belt, the SRS air bag warning light on the instrument panel will illuminate for approximately 6 seconds after the ignition switch has been turned to the ON position, and then it should turn off.**

⚠ CAUTION

If the pre-tensioner seat belt is not working properly, the SRS air bag warning light will illuminate even if there is no malfunction of the SRS air bag. If the SRS air bag warning light does not illuminate when the ignition key is turned to ON, or if it remains illuminated after illuminating for approximately 6 seconds, or if it illuminates whilst the vehicle is being driven, have the system inspected by a professional workshop. Kia recommends to visit an authorised Kia dealer/service partner.

⚠ WARNING

- **Pre-tensioners are designed to operate only one time. After activation, pre-tensioner seat belts must be replaced. All seat belts, of any type, should always be replaced after they have been worn during a collision.**
- **The pre-tensioner seat belt assembly mechanisms become hot during activation. Do not touch the pre-tensioner seat belt assemblies for several minutes after they have been activated.**
- **Do not attempt to inspect or replace the pre-tensioner seat belts yourself. Have the system inspected by a professional workshop. Kia recommends to visit an authorised Kia dealer/service partner.**

(Continued)

(Continued)

- **Do not strike the pre-tensioner seat belt assemblies.**
- **Do not attempt to service or repair the pre-tensioner seat belt system in any manner.**
- **Improper handling of the pre-tensioner seat belt assemblies, and failure to heed the warnings not to strike, modify, inspect, replace, service or repair the pre-tensioner seat belt assemblies may lead to improper operation or inadvertent activation and serious injury.**
- **Always wear the seat belts when driving or riding in a motor vehicle.**
- **If the vehicle or pre-tensioner seat belt must be discarded, contact a professional workshop. Kia recommends to visit an authorised Kia dealer/service partner.**

⚠ CAUTION

Body work on the front area of the vehicle may damage the pre-tensioner seat belt system.

Therefore, have the system serviced by a professional workshop. Kia recommends to visit an authorised Kia dealer/service partner.

Seat belt precautions

⚠ WARNING

- **All occupants of the vehicle must wear their seat belts at all times. Seat belts and child restraints reduce the risk of serious or fatal injuries for all occupants in the event of a collision or sudden stop. Without a seat belt, occupants could be shifted too close to a deploying air bag, strike the interior structure or be thrown from the vehicle. Properly worn seat belts greatly reduce these hazards.**

  Always follow the precautions about seat belts, air bags and occupant safety contained in this manual.
- **Never wear a seat belt over fragile objects. If there is a sudden stop or impact, the seat belt can damage it.**

Infant or small child

You should be aware of the specific requirements in your country. Child and/or infant seats must be properly placed and installed in the rear seat. For more information about the use of these restraints, refer to “Child restraint system” in this section.

⚠ WARNING

Every person in your vehicle needs to be properly restrained at all times, including infants and children. Never hold a child in your arms or lap when riding in a vehicle. The violent forces created during a crash will tear the child from your arms and throw the child against the interior. Always use a child restraint appropriate for your child's height and weight.

✻ NOTICE

Small children are best protected from injury in an accident when properly restrained in the rear seat by a child restraint system that meets the requirements of the Safety Standards of your country. Before buying any child restraint system, make sure that it has a label certifying that it meets Safety Standards of your country. The restraint must be appropriate for your child's height and weight. Check the label on the child restraint for this information. Refer to "Child restraint system" in this section.

Larger children

Children who are too large for child restraint systems should always occupy the rear seat and use the available lap/shoulder belts. The lap portion should be fastened and snugged on the hips and as low as possible. Check if belt fits periodically. A child's squirming could put the belt out of position. Children are given the most safety in the event of an accident when they are restrained by a proper restraint system in the rear seat. If a larger child (over age 12) must be seated in the front seat, the child should be securely restrained by the available lap/shoulder belt and the seat should be placed in the rearmost position. Children age 12 and under should be restrained securely in the rear seat. NEVER place a child age 12 and under in the front seat. NEVER place a rear facing child seat in the front seat of a vehicle.

If the shoulder belt portion slightly touches the child's neck or face, try placing the child closer to the centre of the vehicle. If the shoulder belt still touches their face or neck they need to be returned to a child restraint system.

⚠ WARNING - Shoulder belts on small children

- **Never allow a shoulder belt to be in contact with a child's neck or face whilst the vehicle is in motion.**
- **If seat belts are not properly worn and adjusted on children, there is a risk of death or serious injury.**

Pregnant women

The use of a seat belt is recommended for pregnant women to lessen the chance of injury in an accident. When a seat belt is used, the lap belt portion should be placed as low and snugly as possible on the hips, not across the abdomen. For specific recommendations, consult a physician.

⚠ WARNING - Pregnant women

Pregnant women must never place the lap portion of the safety belt over the area of the abdomen where the fetus is located or above the abdomen where the belt could crush the fetus during an impact.

Injured person

A seat belt should be used when an injured person is being transported. When this is necessary, you should consult a physician for recommendations.

One person per belt

Two people (including children) should never attempt to use a single seat belt. This could increase the severity of injuries in case of an accident.

Do not lie down

To reduce the chance of injuries in the event of an accident and to achieve maximum effectiveness of the restraint system, all passengers should be sitting up and the front and rear seats should be in an upright position when the vehicle is moving. A seat belt cannot provide proper protection if the person is lying down in the rear seat or if the front and rear seats are in a reclined position.

⚠ WARNING

Riding with a reclined seatback increases your chance of serious or fatal injuries in the event of a collision or sudden stop. The protection of your restraint system (seat belts and air bags) is greatly reduced by reclining your seat. Seat belts must be snug against your hips and chest to work properly. The more the seatback is reclined, the greater the chance that an occupant's hips will slide under the lap belt causing serious internal injuries or the occupant's neck could strike the shoulder belt. Drivers and passengers should always sit well back in their seats, properly belted, and with the seatbacks upright.

Care of seat belts

Seat belt systems should never be disassembled or modified. In addition, care should be taken to assure that seat belts and belt hardware are not damaged by seat hinges, doors or other abuse.

⚠ WARNING

- **When you return the rear seatback to its upright position after the rear seatback has been folded down, be careful not to damage the seat belt webbing or buckle. Be sure that the webbing or buckle does not get caught or pinched in the rear seat. A seat belt with damaged webbing or buckle could possibly fail during a collision or sudden stop, resulting in serious injury. If the webbing or buckles are damaged, get them replaced immediately.**
- **Seatbelts can become hot in a vehicle that has been closed up in sunny weather.**

  They could burn infants and children.

Periodic inspection

All seat belts should be inspected periodically for wear or damage of any kind. Any damaged parts should be replaced as soon as possible.

Keep belts clean and dry

Seat belts should be kept clean and dry. If belts become dirty, they can be cleaned by using a mild soap solution and warm water. Bleach, dye, strong detergents or abrasives should not be used because they may damage and weaken the fabric.

When to replace seat belts

Entire in-use seat belt assembly or assemblies should be replaced if the vehicle has been involved in an accident. This should be done even if no damage is visible. In this case, have the system replaced by a professional workshop. Kia recommends to consult an authorised Kia dealer/service partner.

CHILD RESTRAINT SYSTEM (CRS)

Our recommendation:

Children always in the rear

⚠ WARNING

Always properly restrain children in the vehicle. Children of all ages are safer when riding in the rear seats. Never place a rearward-facing Child Restraint System on the front passenger seat, unless the air bag is deactivated.

Children under age 13 should always ride in the rear seats and must always be properly restrained to minimise the risk of injury in an accident, sudden stop or sudden manoeuvre.

According to accident statistics, children are safer when properly restrained in the rear seats than in the front seat. Children too large for a Child Restraint System must use the seat belts provided.

Most countries have regulations which require children to travel in approved Child Restraint Systems.

The laws governing the age or height/weight restrictions at which seat belts can be used instead of Child Restraint System differs among countries, so you should be aware of the specific requirements in your country, and where you are travelling.

Child Restraint Systems must be properly installed in the vehicle seat. Always use a commercially available Child Restraint System that meets the requirements of your country.

Child Restraint System (CRS)

Infants and younger children must be restrained in an appropriate rearward-facing or forward-facing CRS that has first been properly secured to the seat of the vehicle. Read and comply with the instructions for installation and use provided by the manufacturer of the Child Restraint System.

⚠ WARNING

- **Always follow the Child Restraint System manufacturer's instructions for installation and use.**
- **Always properly restrain your child in the Child Restraint System.**
- **Do not use an infant carrier or a child safety seat that "hooks" over a seatback, it may not provide adequate protection in an accident.**
- **After an accident, have the system checked by a professional workshop. Kia recommends to visit an authorised Kia dealer/service partner.**

Selecting a Child Restraint System (CRS)

When selecting a Child Restraint System for your child, always:

- Make sure the Child Restraint System has a label certifying that it meets applicable Safety Standards of your country.

  A Child Restraint System may only be installed if it was approved in accordance with the requirements of ECE-R44, ECE-R129 or relevant regulation.
- Select a Child Restraint System based on your child's height and weight. The required label or the instructions for use typically provide this information.
- Select a Child Restraint System that fits the vehicle seating position where it will be used.

  For the suitability of Child Restraint Systems on the vehicle's seating positions, please refer to the installation tables.
- Read and comply with the warnings and instructions for installation and use provided with the Child Restraint System.

Child Restraint System types

There are three main types of Child Restraint Systems: rearward-facing, forward-facing and booster Child Restraint Systems.

They are classified according to the child's age, height and weight.

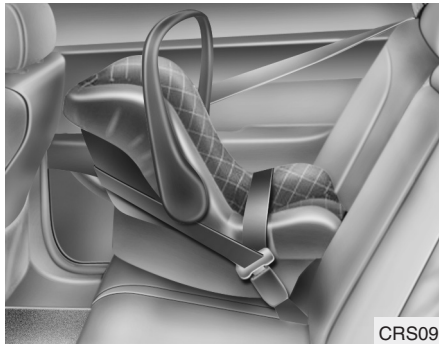

Rearward-facing Child Restraint System

A rearward-facing Child Restraint System provides restraint with the seating surface against the back of the child. The harness system holds the child in place, and in an accident, acts to keep the child positioned in the Child Restraint Systems and reduce the stress to the fragile neck and spinal cord.

All children under the age of one year must always ride in a rearward-facing Child Restraint System. There are different types of rearward-facing Child Restraint Systems: infant-only Child Restraint Systems can only be used rearward-facing. Convertible and 3-in-1 Child Restraint Systems typically have higher height and weight limits for the rearward-facing position, allowing you to keep your child rearward-facing for a longer period of time.

Keep using Child Restraint Systems in the rearward-facing position as long as children fit within the height and weight limits allowed by the Child Restraint System's manufacturer.


OQL035032

Forward-facing Child Restraint System

A forward-facing Child Restraint System provides restraint for the child's body with a harness. Keep children in a forward-facing Child Restraint System with a harness until they reach the top height or weight limit allowed by your Child Restraint System's manufacturer.

Once your child outgrows the forward-facing Child Restraint System, your child is ready for a booster seat.

Booster seats

A booster seat is a Child Restraint System designed to improve the fit of the vehicle's seat belt system. A booster seat positions the seat belt so that it fits properly over the stronger parts of your child's body. Keep your children in booster seats until they are big enough to fit in a seat belt properly.

For a seat belt to fit properly, the lap belt must lie comfortable across the upper thighs, not the stomach. The shoulder belt should lie comfortable across the shoulder and chest and not across the neck or face. Children under age 13 must always be properly restrained to minimise the risk of injury in an accident, sudden stop or sudden manoeuvre.

Installing a Child Restraint System (CRS)

⚠ WARNING

Before installing your Child Restraint System always:

Read and follow the instructions provided by the manufacturer of the Child Restraint System.

Failure to follow all warnings and instructions could increase the risk of the SERIOUS INJURY or DEATH if an accident occurs.

⚠ WARNING

If the vehicle headrest prevents proper installation of a Child Restraint System, the headrest of the respective seating position shall be readjusted or entirely removed.

After selecting a proper Child Restraint System for your child and checking that the Child Restraint System fits properly on the seating position, there are three general steps for a proper installation:

- **Properly secure the Child Restraint System to the vehicle.** All Child Restraint Systems must be secured to the vehicle with the lap belt or lap part of a lap/shoulder belt or with the ISOFIX top-tether and/or ISOFIX anchorage and/or with the support leg.
- **Make sure the Child Restraint System is firmly secured.** After installing a Child Restraint System to the vehicle, push and pull the seat forward and from side-to-side to verify that it is securely attached to the seat. A Child Restraint System secured with a seat belt should be installed as firmly as possible. However, some side-to-side movement can be expected.

  When installing a Child Restraint System, adjust the vehicle seat and seatback (up and down, forward and rearward) so that your child fits in the Child Restraint System in a confortable manner.
- **Secure the child in the Child Restraint System.** Make sure the child is properly strapped in the Child Restraint System according to the Child Restraint System manufacturer's instructions.

⚠ CAUTION

A Child Restraint System in a closed vehicle can become very hot. To prevent burns, check the seating surface and buckles before placing your child in the Child Restraint System.

ISOFIX anchorage and top-tether anchorage (ISOFIX anchorage system) for children

The ISOFIX system holds a Child Restraint System during driving and in an accident. This system is designed to make installation of the Child Restraint System easier and reduce the possibility of improperly installing your Child Restraint System. The ISOFIX system uses anchors in the vehicle and attachments on the Child Restraint System. The ISOFIX system eliminates the need to use seat belts to secure the Child Restraint System to the rear seats.

ISOFIX anchorages are metal bars built into the vehicle. There are two lower anchors for each ISOFIX seating position that will accommodate a Child Restraint System with lower attachments.

To use the ISOFIX system in your vehicle, you must have a Child Restraint System with ISOFIX attachments.

The Child Restraint System manufacturer will provide you with instructions on how to use the Child Restraint System with its attachments for the ISOFIX anchorages.

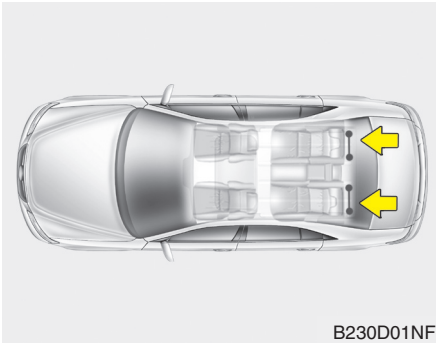

B230D01NF

ISOFIX anchorages have been provided in the left and right outboard rear seating positions. Their locations are shown in the illustration.

⚠ WARNING

Do not attempt to install a Child Restraint System using ISOFIX anchorages in the rear centre seating position. There are no ISOFIX anchorages provided for this seat. Using the outboard seat anchorages, for the CRS installation on the rear centre seating position, can damage the anchorages.

■ Type A

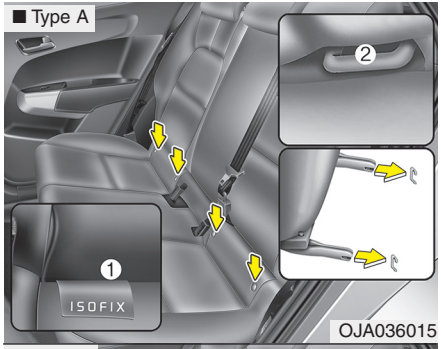

OJA036015

■ Type B

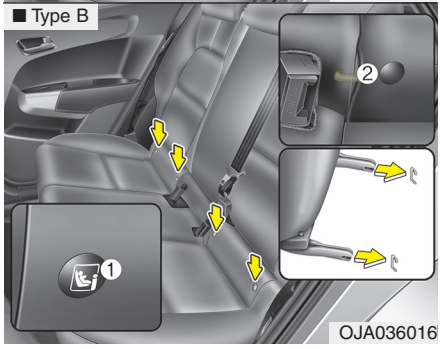

OJA036016

ISOFIX anchorages are located between the seatback and the seat cushion of the rear seat left and right outboard seating positions, indicated by the symbols.

❈ (1) : ISOFIX Anchor Position Indicator (Type A- ISOFIX ,Type B-)

(2) : ISOFIX Anchor

Securing a Child Restraint System with the "ISOFIX Anchorage System"

To install an i-Size or ISOFIX-compatible Child Restraint System in either of the rear outboard seating positions:

1. Move the seat belt buckle away from the ISOFIX anchorages.
2. Move any other objects away from the anchorages that could prevent a secure connection between the Child Restraint System and the ISOFIX anchorages.
3. Place the Child Restraint System on the vehicle seat, then attach the seat to the ISOFIX anchorages according to the instructions provided by the Child Restraint System manufacturer.
4. Follow the instructions of the Child Restraint System's manufacturer for proper installation and connection of the ISOFIX attachments on the Child Restraint System to the ISOFIX anchorages.

⚠ WARNING

Take the following precautions when using the ISOFIX system:

- **Read and follow all installation instructions provided with your Child Restraint System.**
- **To prevent the child from reaching and taking hold of unretracted seat belts, buckle all unused rear seat belts and retract the seat belt webbing behind the child. Children can be strangled if a shoulder belt becomes wrapped around their neck and the seat belt tightens.**
- **NEVER attach more than one Child Restraint System to a single anchorage. This could cause the anchor or attachment to come loose or break.**
- **Always have the ISOFIX system inspected by your dealer after an accident. An accident can damage the ISOFIX system and may not properly secure the Child Restraint System.**

Securing a Child Restraint System seat with "Top-tether Anchorage" system (if equipped)

■ Type A

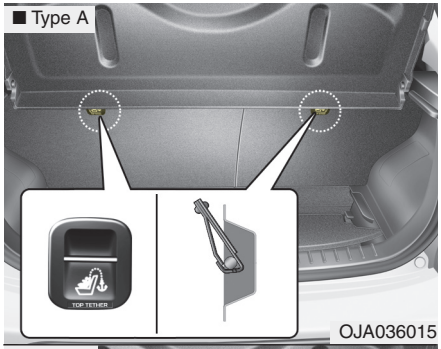

OJA036015

■ Type B

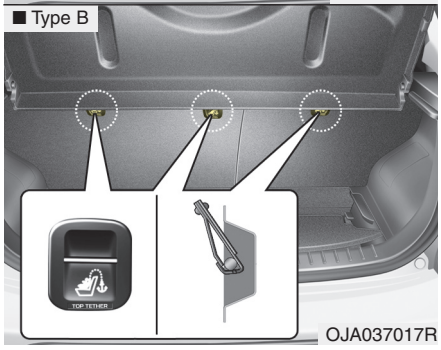

OJA037017R

Child restraint system top tether anchorages are located on the back of the rear seatbacks.

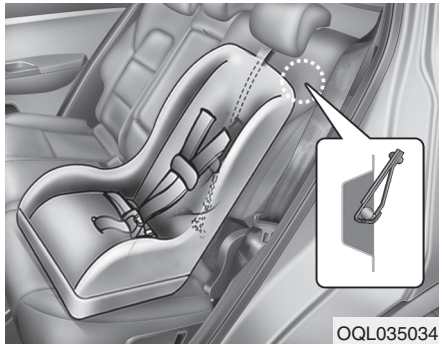

1. Route the Child Restraint System top-tether strap over the seatback. Placing the top tether strap, please follow the instructions of the Child Restraint System manufacturer.
2. Connect the top-tether strap to the top-tether anchorage, then tighten the top-tether strap according to the instructions of your Child Restraint System's manufacturer to firmly attach the Child Restraint System to the seat.

⚠ WARNING

Take the following precautions when installing the top-tether:

- **Read and follow all installation instructions provided with your Child Restraint System.**
- **NEVER attach more than one Child Restraint System to a single ISOFIX top-tether anchorage. This could cause the anchorage or attachment to come loose or break.**
- **Do not attach the top-tether to anything other than the correct top-tether anchorage. It may not work properly if attached to something else.**

(Continued)

(Continued)

- **Child Restraint System anchorages are designed to withstand only those loads imposed by correctly fitted Child Restraint System.**

  Under no circumstances are they to be used for adult seat belts or harnesses or for attaching other items or equipment to the vehicle.

⚠ WARNING - Australian design rule

Child restraint anchorages are designed to withstand only those loads imposed by correctly fitted child restraints. Under no circumstances are they to be used for adult seat belts, harnesses, or for attaching other items or equipment to the vehicle.

Suitability of each seating position for ISOFIX Child Restraint Systems according to ECE regulations

Mass Group	Size Class	Fixture	Vehicle ISOFIX positions			
			1st	2nd row		
			Passenger	Left Hand	Centre	Right Hand
Carrycot	F	ISO/L1	N/A	X	N/A	X
	G	ISO/L2	N/A	X	N/A	X
0 : UP to 10kg	E	ISO/R1	N/A	IL	N/A	IL
0+ : UP to 13kg	E	ISO/R1	N/A	IL	N/A	IL
	D	ISO/R2	N/A	IL*	N/A	IL*
	C	ISO/R3	N/A	X	N/A	X
I : 9 To 18kg	D	ISO/R2	N/A	IL*	N/A	IL*
	C	ISO/R3	N/A	X	N/A	X
	B	ISO/F2	N/A	IUF, IL	N/A	IUF, IL
	B1	ISO/F2X	N/A	IUF, IL	N/A	IUF, IL
	A	ISO/F3	N/A	IUF, IL	N/A	IUF, IL

IUF = Suitable for ISOFIX forward child restraints systems of universal category approved for use in the mass group.

IL* = Suitable for particular ISOFIX child restraints systems (CRS) given in the attached list.
- Front Driver Seat : Seat Height should be up highest position. (If height device does not exist, Seat should be moved 10mm in front of mid position.)
- Front Passenger Seat : Seat should be moved foremost position.

IL = Suitable for particular ISOFIX child restraints systems (CRS) given in the attached list. These ISOFIX CRS are those of the "specific vehicle", "restricted" or "semi-universal" categories.

X = ISOFIX position not suitable for ISOFIX child restraint system in this mass group and/or this size class.

A - ISO/F3 : Full-Height forward-facing toddler Child Restraint System (height 720mm)

B - ISO/F2 : Reduced-height forward-facing toddler Child Restraint System (height 650mm)

B1 - ISO/F2X : Reduced-height second version back surface shape forward-facing toddler Child Restraint System (height 650mm)

C - ISO/R3 : Full-size rearward-facing toddler Child Restraint System

D - ISO/R2 : Reduced-size rearward-facing toddler Child Restraint System

E - ISO/R1 : Infant-size rearward-facing Child Restraint System

F - ISO/L1 : Left lateral facing position Child Restraint System (carry-cot)

G - ISO/L2 : Right lateral facing position Child Restraint System (carry-cot)

Securing a Child Restraint System with a lap/shoulder belt

When not using the ISOFIX system, all Child Restraint Systems must be secured to a rear seat with the lap part of a lap/shoulder belt.

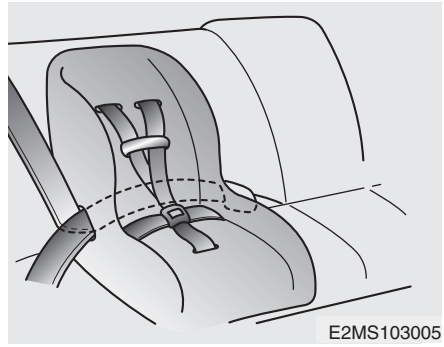

Installing a Child Restraint System with a lap/shoulder belt

To install a Child Restraint System on the rear seats, do the following:

1. Place the Child Restraint System on a rear seat and route the lap/shoulder belt around or through the Child Restraint System, following the Child Restraint System manufacturer's instructions.

   Make sure the seat belt webbing is not twisted.

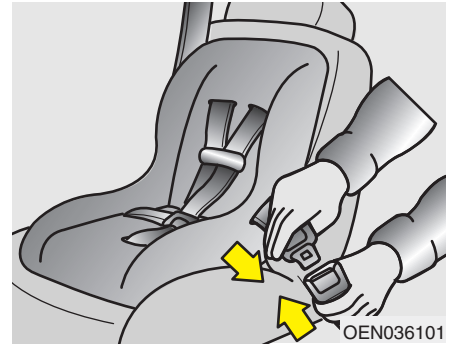

2. Fasten the lap/shoulder belt latch into the buckle. Listen for the distinct "click" sound. Position the release button so that it is easy to access in case of an emergency.

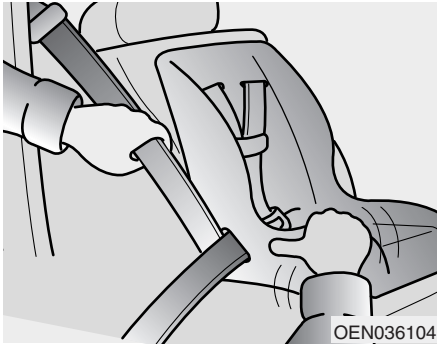
OEN036104

3. Remove as much slack from the belt as possible by pushing down on the Child Restraint System whilst feeding the shoulder belt back into the retractor.
4. Push and pull on the Child Restraint System to confirm that the seat belt is holding it firmly in place.

If your Child Restraint System manufacturer recommends the use of a top-tether with the lap/shoulder belt.

To remove the Child Restraint System, press the release button on the buckle and then pull the lap/shoulder belt out of the Child Restraint System and allow the seat belt to retract fully.

Suitability of each seating position for "universal" category belted Child Restraint Systems according to ECE regulations (Rear seat for 2 people, For Europe)

Use Child Restraint System that have been officially approved and are appropriate for your children. When using the Child Restraint System, refer to the following table.

Mass Group		Seating Position			
		Front Passenger Outboard		Second Row	
		Airbag activated	Airbag deactivated	Outboard Left	Outboard Right
Group 0 (0-9months)	up to 10kg	X	U*	U	U
Group 0 + (0-2years)	up to 13kg	X	U*	U	U
Group I (9months-4years)	9 to 18kg	X	U*	U	U
Group II (15 to 25kg)	15 to 25kg	UF	U*	U	U
Group III (22 to 36kg)	22 to 36kg	UF	U*	U	U

U = Suitable for "universal" category Child Restraint Systems approved for use in this mass group

U*= Suitable for "universal" category Child Restraint Systems with Seat back angle should be at upright position

UF = Suitable for forward facing "universal" category restraints approved for use in this mass group

L = Suitable for particular child restraints given on attached list. These restraints may be of the "specific vehicle", "restricted" or "semi-universal" categories.

B = Built-in restraint approved for this mass group.

X = Seat position not suitable for children in this mass group.

❇ Never install a Child Restraint System with a support leg on the front passenger seat and the second row centre seat.

Suitability of each seating position for "universal" category belted Child Restraint Systems according to ECE regulations (Rear seat for 3 people, For Europe)

Use Child Restraint System that have been officially approved and are appropriate for your children. When using the Child Restraint System, refer to the following table.

Mass Group		Seating Position				
		Front Passenger Outboard		Second Row		
		Airbag activated	Airbag deactivated	Outboard Left	Centre (3 POINT BELT)	Outboard Right
Group 0 (0-9months)	up to 10kg	X	U*	U	X	U
Group 0 + (0-2years)	up to 13kg	X	U*	U	X	U
Group I (9months-4years)	9 to 18kg	X	U*	U	X	U
Group II (15 to 25kg)	15 to 25kg	UF	U*	U	X	U
Group III (22 to 36kg)	22 to 36kg	UF	U*	U	X	U

U = Suitable for "universal" category Child Restraint Systems approved for use in this mass group

U*= Suitable for "universal" category Child Restraint Systems with Seat back angle should be at upright position

UF = Suitable for forward facing "universal" category restraints approved for use in this mass group

L = Suitable for particular child restraints given on attached list. These restraints may be of the "specific vehicle", "restricted" or "semi-universal" categories.

B = Built-in restraint approved for this mass group.

X = Seat position not suitable for children in this mass group.

❈ Never install a Child Restraint System with a support leg on the front passenger seat and the second row centre seat.

Suitability of each seating position for "universal" category belted Child Restraint Systems according to ECE regulations (Except Europe)

Use Child Restraint System that have been officially approved and are appropriate for your children. When using the Child Restraint System, refer to the following table.

Mass Group		Seating Position				
		Front Passenger Outboard	Second Row			
		Airbag activated	Outboard Left	Centre (3 POINT BELT)	Centre (2 POINT BELT)	Outboard Right
Group 0 (0-9months)	up to 10kg	U*	U	X	X	U
Group 0 + (0-2years)	up to 13kg	U*	U	X	X	U
Group I (9months-4years)	9 to 18kg	U*	U	X	X	U
Group II (15 to 25kg)	15 to 25kg	U*	U	X	X	U
Group III (22 to 36kg)	22 to 36kg	U*	U	X	X	U

U = Suitable for "universal" category Child Restraint Systems approved for use in this mass group

U*= Suitable for "universal" category Child Restraint Systems with Seat back angle should be at upright position

UF = Suitable for forward facing "universal" category restraints approved for use in this mass group

L = Suitable for particular child restraints given on attached list. These restraints may be of the "specific vehicle", "restricted" or "semi-universal" categories.

B = Built-in restraint approved for this mass group.

X = Seat position not suitable for children in this mass group.

❊ Never install a Child Restraint System with a support leg on the front passenger seat and the second row centre seat.

i-Size Child Restraint Systems according to ECE regulations

Mass Group	Seating Position			
	Front Passenger Outboard	Second Row		
		Outboard Left	Centre	Outboard Right
i-size Child Restraints Systems	X	i-U	X	i-U

i-U = Suitable for i-Size "universal" Child Restraints Systems forward and rearward facing

i-UF = Suitable for forward-facing i-Size "universal" Child Restraints Systems only.

X = Seat position not suitable for i-size CRS.

❊ To install i-Size CRS

- Front Driver Seat : Seat Height should be up highest position.
  (If height device does not exist, Seat should be moved 10mm in front of mid position.)
- Front Passenger Seat : Seat should be moved foremost position.

Recommended child restraint systems – For Europe

Mass Group	Name	Manufacturer	Type of Fixation	ECE-R44 Approval No.
Group 0+	Cabriofix & Familyfix	Maxi Cosi	Rearward-facing with ISOFIX Base	E4 04443907
Group I	Duo Plus	Britax Römer	Forward-facing with ISOFIX and top-tether	E1 04301133
Group II	KidFix II XP	Britax Römer	Forward-facing with ISOFIX and vehicle belt	E1 04301323
Group III	Junior III	Graco	Forward-facing with vehicle belt	E11 03.44.164 E11 03.44.165

❋The Graco Junior III will be used without the backrest

CRS Manutacturer information

Britax Römer http://www.britax.com

Graco http://www.gracobaby.com

Maxi Cosi http://www.maxi-cosi.com

AIR BAG - SUPPLEMENTAL RESTRAINT SYSTEM (IF EQUIPPED)

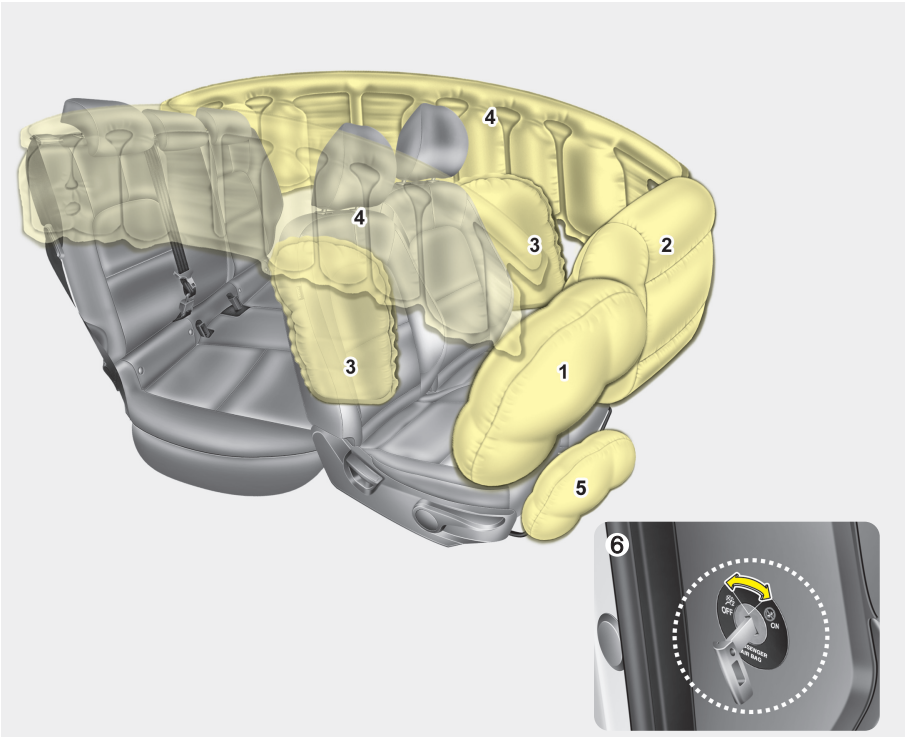

❊ The actual air bags in the vehicle may differ from the illustration.

OJA037018R/OJA037019R

(1) Driver's front air bag*
(2) Passenger's front air bag*
(3) Side air bag*
(4) Curtain air bag*
(5) Driver`s knee air bag*
(6) Front passenger's air bag ON/OFF switch*

* : if equipped

⚠ WARNING

- **Even in vehicles with air bags, you and your passengers must always wear the safety belts provided in order to minimise the risk and severity of injury in the event of a collision or rollover.**
- **SRS and pretensioners contain explosive chemicals.**

  If scraping a vehicle without removing SRS and pretensioners from a vehicle, it may cause fire. Before scraping a vehicle, contact a professional workshop. Kia recommends to visit an authorised Kia dealer/service partner.
- **Keep the SRS parts and wirings away from water or any liquid. If the SRS components are inoperative due to exposure to water or liquids, it may cause fire or severe injury.**

How does the air bag system operate

- Air bags are activated (able to inflate if necessary) only when the ignition switch is turned to the ON or START position.
- Air bags inflate instantly in the event of a serious frontal collision or side collision (if equipped with a side air bag or curtain air bag) in order to help protect the occupants from serious physical injury.

✻ NOTICE - If equipped with rollover sensor

Also, the air bags inflate instantly in the event of a rollover (if equipped with a side air bag or curtain air bag) in order to help protect the occupants from serious physical injury.

- In normal conditions, the airbag is designed to deploy based on certain angle and intensity of the collision. These two factors are crucial elements for deciding whether to transmit airbag deployment signal or start the electrical operation or not.
- The airbag will deploy based on angle and intensity of the collision. It will not deploy in every crash or collision situations
- The front air bags will completely inflate and deflate in an instant.

  It is virtually impossible for you to see the air bags inflate during an accident.

  It is much more likely that you will simply see the deflated air bags hanging out of their storage compartments after the collision.

- In order to help provide protection in a severe collision, the air bags must inflate rapidly. The speed of the air bag inflation is a consequence of extremely short time in which a collision occurs and the need to inflate the air bag between the occupant and the vehicle structures before the occupant impacts those structures.

  This speed of inflation reduces the risk of serious or life-threatening injuries in a severe collision and is thus a necessary part of the air bag design.

  However, air bag inflation can also cause injuries which can include facial abrasions, bruises and broken bones because the inflation speed also causes the air bags to expand with a great deal of force.
- **There are even circumstances under which contact with the steering wheel air bag can cause fatal injuries, especially if the occupant is positioned excessively close to the steering wheel.**

⚠ WARNING

- **To avoid severe personal injury or death caused by deploying air bags in a collision, the driver should sit as far back from the steering wheel air bag as possible (at least 250 mm (10 inches) away). The front passengers should always move their seats as far back as possible and sit back in their seat.**
- **Air bags inflate instantly in the event of a collision, and passengers may be injured by the air bag expansion force if they are not in a proper position.**
- **Air bag inflation may cause injuries including facial or bodily abrasions, injuries from broken glasses or burns.**

Noise and smoke

When the air bags inflate, they make a loud noise and they leave smoke and powder in the air inside of the vehicle. This is normal and is a result of the ignition of the air bag inflator. After the air bag inflates, you may feel substantial discomfort in breathing due to the contact of your chest with both the seat belt and the air bag, as well as from breathing the smoke and powder. **Open your doors and/or windows as soon as possible after impact in order to reduce discomfort and prevent prolonged exposure to the smoke and powder.**

Though the smoke and powder are non-toxic, they may cause irritation to the skin (eyes, nose and throat, etc). If this is the case, wash and rinse with cold water immediately and consult a doctor if the symptom persists.

⚠ WARNING

When the air bags deploy, the air bag related parts in the steering wheel and/or instrument panel and/or in both sides of the roof rails above the front and rear doors are very hot. To prevent injury, do not touch the air bag storage area's internal components immediately after an air bag has inflated.

Do not install or place any accessories near air bag deployment areas, such as the instrument panel, windows, pillars, and roof rails.

Front passenger's air bag warning label for child restraint system

■ Type A



OYDESA2042

■ Type B



OHM036053L

Never place a rear-facing child restraint in the front passenger's seat. If the air bag deploys, it would impact the rear-facing child restraint, causing serious or fatal injury.

In addition, do not place a front-facing child restraints in the front passenger's seat. If the front passenger air bag inflates, it could cause serious or fatal injuries to the child.

If your vehicle is equipped with the passenger's front air bag ON/OFF switch, you can activate or deactivate the front passenger's air bag when necessary.

⚠ WARNING

- **Extreme Hazard! Do not use a rearward facing child restraint on a seat protected by an air bag in front of it!**
- **NEVER use a rearward facing child restraint on a seat protected by an ACTIVE AIR BAG in front of it, DEATH or SERIOUS INJURY to the CHILD can occur.**
- **Never put a child restraint in the front passenger's seat. If the front passenger air bag inflates, it can cause serious or fatal injuries.**
- **When children are seated in the rear outboard seats of a vehicle equipped with side and/or curtain air bags, be sure to install the child restraint system as far away from the door side as possible, and securely lock the child restraint system in position.**

  Inflation of side and/or curtain air bags could cause serious injury or death to an infant or child.

Air bag warning light



W7-147

The purpose of the air bag warning light in your instrument panel is to alert you of a potential problem with your air bag - Supplemental Restraint System (SRS).

When the ignition switch is turned ON, the warning light should illuminate for approximately 6 seconds, then go off.

Have the system checked if:

- The light does not turn on briefly when you turn the ignition ON.
- The light stays on after illuminating for approximately 6 seconds.
- The light comes on whilst the vehicle is in motion.
- The light blinks when the ignition switch is in ON position.

Passenger's front air bag ON indicator (if equipped)

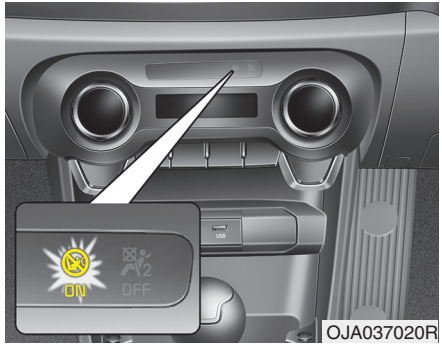

The passenger's front air bag ON indicator illuminates for approximately 4 seconds after the ignition switch is turned to the ON position.

The passenger's front air bag ON indicator also comes on when the passenger's front air bag ON/OFF switch is set to the ON position and goes off after approximately 60 seconds.

Passenger's front air bag OFF indicator (if equipped)

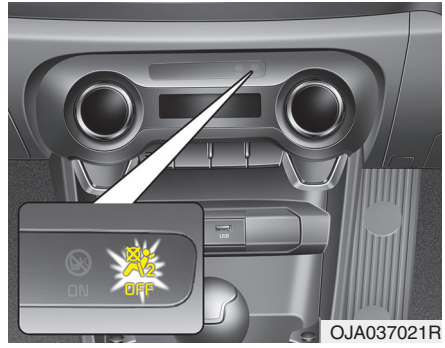

The passenger's front air bag OFF indicator illuminates for about 4 seconds after the ignition switch is turned to the ON position.

The passenger's front air bag OFF indicator also comes on when the passenger's front air bag ON/OFF switch is set to the OFF position and goes off when the passenger's front air bag ON/OFF switch is set to the ON position.

⚠ CAUTION

If the passenger's front air bag ON/OFF switch malfunctions, the passenger's front air bag OFF indicator will not illuminate (The passenger's front air bag ON indicator comes on and goes off after approximately 60 seconds) and the passenger's front air bag will inflate in a frontal impact even if the passenger's front air bag ON/OFF switch is set to the OFF position.

In this case, have the passenger's front air bag ON/OFF switch and the SRS air bag system inspected by a professional workshop.

Kia recommends to visit an authorised Kia dealer/service partner.

SRS components and functions

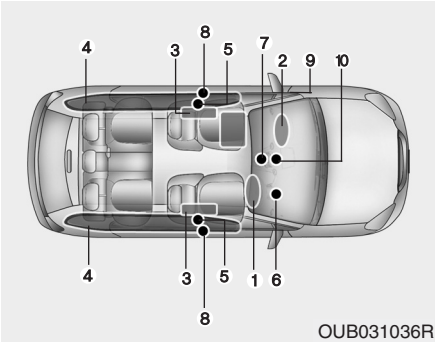

The SRS consists of the following components:

1. Driver's front air bag module*
2. Passenger's front air bag module*
3. Side air bag modules*
4. Curtain air bag modules*
5. Retractor pre-tensioner assemblies*
6. Air bag warning light
7. SRS control module (SRSCM) / Rollover sensor*
8. Side impact sensors*
9. Passenger's front air bag ON/OFF switch*
10. Passenger's front air bag ON/OFF indicator*

* : if equipped

The SRSCM continually monitors all SRS components whilst the ignition switch is ON to determine if a crash impact is severe enough to require air bag deployment or pre-tensioner seat belt deployment.

The SRS air bag warning light "" on the instrument panel will illuminate for about 6 seconds after the ignition switch is turned to the ON position, after which the SRS air bag warning light "" should go out.

⚠ WARNING

If any of the following conditions occurs, this indicates a malfunction of the SRS. In this case, have the system inspected by a professional workshop. Kia recommends to visit an authorised Kia dealer/service partner.

- **The light does not turn on briefly when you turn the ignition ON.**
- **The light stays on after illuminating for approximately 6 seconds.**
- **The light comes on whilst the vehicle is in motion.**
- **The light blinks when the ignition switch is in ON position.**

Driver's front air bag (1) (if equipped)

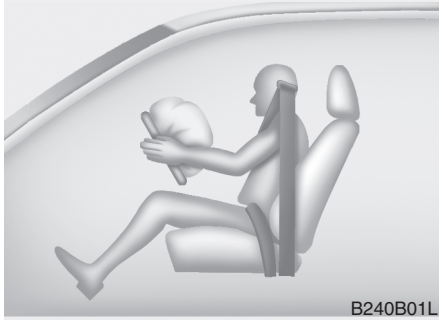

The air bag modules are located both in the centre of the steering wheel and in the front passenger's panel above the glove box. When the SRSCM detects a sufficiently severe impact to the front of the vehicle, it will automatically deploy the front air bags.

Driver's front air bag (2)(if equipped)

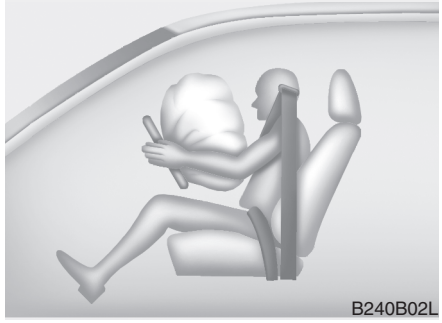

Upon deployment, tear seams molded directly into the pad covers will separate under pressure from the expansion of the air bags. Further opening of the covers then allows full inflation of the air bags.

Driver's front air bag (3) (if equipped)

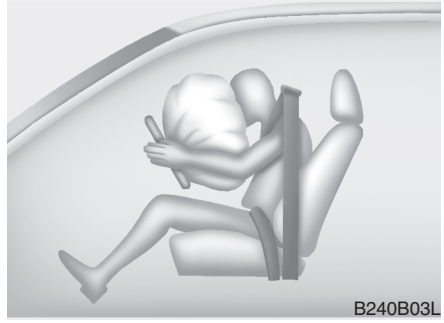

A fully inflated air bag, in combination with a properly worn seat belt, slows the driver's or the passenger's forward motion, reducing the risk of head and chest injury.

After complete inflation, the air bag immediately starts deflating, enabling the driver to maintain forward visibility and the ability to steer or operate other controls.

Passenger's front air bag (if equipped)



⚠ WARNING

- **Do not install or place any accessories (drink holder, sticker, etc.) on the front passenger's panel above the glove box in a vehicle with a passenger's air bag. Such objects may become dangerous projectiles and cause injury if the passenger's air bag inflates.**

(Continued)

(Continued)

- **When installing a container of liquid air freshener inside the vehicle, do not place it near the instrument cluster nor on the instrument panel surface.**

  It may become a dangerous projectile and cause injury if the passenger's air bag inflates.

⚠ WARNING

- **If an air bag deploys, there may be a loud noise followed by a fine dust released in the vehicle. These conditions are normal and are not hazardous - the air bags are packed in this fine powder. The dust generated during air bag deployment may cause skin or eye irritation as well as aggravate asthma for some persons. Always wash all exposed skin areas thoroughly with cold water and a mild soap after an accident in which the air bags were deployed.**

(Continued)

(Continued)

- **The SRS can function only when the ignition switch is in the ON position. If the SRS "" warning light does not illuminate, or continuously remains on after illuminating for about 6 seconds when the ignition switch is turned to the ON position, or after the engine is started, comes on whilst driving, the SRS is not working properly. In this case, have the system inspected by a professional workshop. Kia recommends to visit an authorised Kia dealer/service partner.**
- **Before you replace a fuse or disconnect a battery terminal, turn the ignition switch to the LOCK position and remove the ignition key. Never remove or replace the air bag related fuse (s) when the ignition switch is in the ON position. Failure to heed this warning will cause the SRS " " warning light to illuminate.**

Driver's and passenger's front air bag (if equipped)

■ Driver`s front air bag(if equipped)

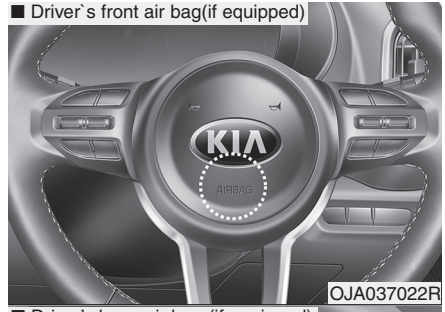

OJA037022R

■ Driver's knee air bag (if equipped)

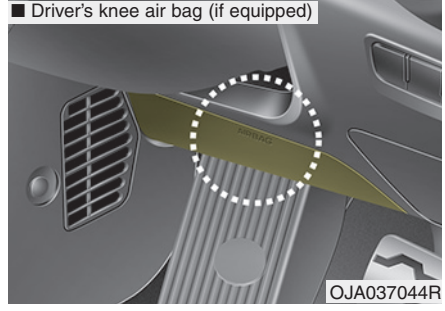

OJA037044R

■ Passenger`s front air bag (if equipped)

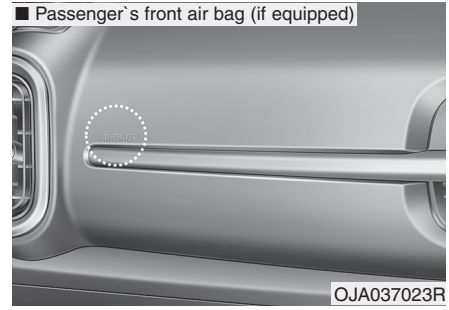

OJA037023R

Your vehicle is equipped with a Supplemental Restraint (Air Bag) System and lap/shoulder belts at both the driver and passenger seating positions.

The indications of the system's presence are the letters "AIRBAG" engraved on the air bag pad cover in the steering wheel and the passenger's side front panel pad above the glove box.

The SRS consists of air bags installed under the pad covers in the centre of the steering wheel and the passenger's side front panel above the glove box.

The purpose of the SRS is to provide the vehicle's driver and/or the front passenger with additional protection than that offered by the seat belt system alone in case of a frontal impact of sufficient severity.

⚠ WARNING

The driver's hands should be placed on the steering wheel at the 9:00 and 3:00 positions. The passenger's arms and hands should be placed on their laps.

⚠ WARNING

Always use seat belts and child restraints – every trip, every time, everyone! Air bags inflate with considerable force and in the blink of an eye. Seat belts help keep occupants in proper position to obtain maximum benefit from the air bag. Even with air bags, improperly belted and unbelted occupants can be severely injured when the air bag inflates. Always follow the precautions about seat belts, air bags and occupant safety contained in this manual.

To reduce the chance of serious or fatal injuries and receive the maximum safety benefit from your restraint system:

- **Never place a child in any child or booster seat in the front seat.**
- **ABC – Always Buckle Children in the back seat. It is the safest place for children of any age to ride.**

(Continued)

(Continued)

- **Front and side air bags can injure occupants improperly positioned in the front seats.**
- **Move your seat as far back as practical from the front air bags, whilst still maintaining control of the vehicle.**
- **You and your passengers should never sit or lean unnecessarily close to the air bags. Improperly positioned drivers and passengers can be severely injured by inflating air bags.**
- **Never lean against the door or centre console – always sit in an upright position.**
- **Do not allow a passenger to ride in the front seat when the passenger's front air bag OFF indicator is illuminated, because the air bag will not deploy in the event of a moderate or severe frontal crash.**

(Continued)

(Continued)

- No objects should be placed over or near the air bag modules on the steering wheel, instrument panel and the front passenger's panel above the glove box, because any such object could cause harm if the vehicle is in a crash severe enough to cause the air bags to deploy.
- Do not tamper with or disconnect SRS wiring or other components of the SRS system. Doing so could result in injury, due to accidental deployment of the air bags or by rendering the SRS inoperative.
- If the SRS air bag warning light remains illuminated whilst the vehicle is being driven, have the system inspected by a professional workshop. Kia recommends to visit an authorised Kia dealer/service partner.

(Continued)

(Continued)

- Air bags can only be used once – have the system replaced by a professional workshop. Kia recommends to visit an authorised Kia dealer/service partner.
- The SRS is designed to deploy the front air bags only when an impact is sufficiently severe and when the impact angle is less than 30° from the forward longitudinal axis of the vehicle. Additionally, the air bags will only deploy once. Seat belts must be worn at all times.
- Front air bags are not intended to deploy in side-impact, rear-impact or rollover crashes. In addition, front air bags will not deploy in frontal crashes below the deployment threshold.
- A child restraint system must never be placed in the front seat. The infant or child could be severely injured or killed by an air bag deployment in case of an accident.

(Continued)

(Continued)

- Children age 12 and under must always be properly restrained in the rear seat. Never allow children to ride in the front passenger seat. If a child over 12 must be seated in the front seat, he or she must be properly belted and the seat should be moved as far back as possible.
- For maximum safety protection in all types of crashes, all occupants including the driver should always wear their seat belts whether or not an air bag is also provided at their seating position to minimise the risk of severe injury or death in the event of a crash. Do not sit or lean unnecessarily close to the air bag whilst the vehicle is in motion.

(Continued)

(Continued)

- **Sitting improperly or out of position can result in serious or fatal injury in a crash. All occupants should sit upright with the seat back in an upright position, centred on the seat cushion with their seat belt on, legs comfortably extended and their feet on the floor until the vehicle is parked and the ignition key is removed.**
- **The SRS air bag system must deploy very rapidly to provide protection in a crash. If an occupant is out of position because of not wearing a seat belt, the air bag may forcefully contact the occupant causing serious or fatal injuries.**

Passenger's front air bag ON/OFF switch (if equipped)



OJA037019R

The passenger's front air bag can be deactivated by the passenger's front air bag ON/OFF switch if a child restraint is installed on the front passenger's seat or if the front passenger's seat is unoccupied by a person.

To ensure the safety of your child, the passenger's front air bag must be deactivated when it should be necessary to install a rearward facing child seat on the front passenger seat in exceptional circumstances.

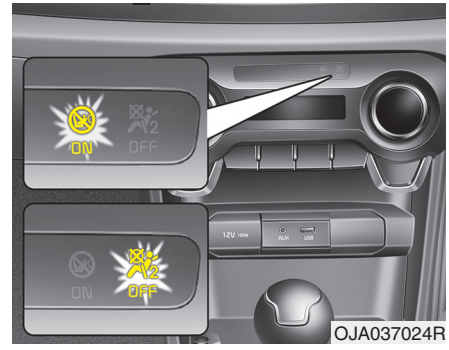

OJA037024R

To deactivate or reactivate the passenger's front air bag:

To deactivate the passenger's front air bag, insert the master key into the passenger's front air bag ON/OFF switch and turn it to the OFF position. The passenger's front air bag OFF indicator ( ) will illuminate and stay on until the passenger's front air bag is reactivated.

To reactivate the passenger's front air bag, insert the master key into the passenger's front air bag ON/OFF switch and turn it to the ON position.

The passenger's front air bag OFF indicator will go out and the passenger's front air bag ON indicator () will illuminate for approximately 60 seconds.

⚠ WARNING

The front air bag ON/OFF switch could turn by using a similar small rigid device. Always check the status of the front air bag ON/OFF switch and passenger's front air bag ON/OFF indicator.

✻ NOTICE

- **When the passenger's front air bag ON/OFF switch is set to the ON position, the passenger's front air bag is activated and child or infant seat should not be installed on the front passenger seat.**
- **When the passenger's front air bag ON/OFF switch is set to the OFF position, the passenger's front air bag is deactivated.**

⚠ CAUTION

- ***If the passenger's front air bag ON/OFF switch is not working properly, the air bag warning light ()on the instrument panel will illuminate.***

  And, the passenger's front air bag OFF indicator () will not illuminate (The passenger's front air bag ON indicator comes on and goes off after approximately 60 seconds), the SRS Control Module reactivate the passenger's front air bag and the passenger's front air bag will inflate in frontal impact crashes even if the passenger's front air bag ON/OFF switch is set to the OFF position.

  In this case, have the system inspected by a professional workshop. Kia recommends to visit an authorised Kia dealer/service partner.

(Continued)

(Continued)

- *If the SRS air bag warning light blinks or does not illuminate when the ignition switch is turned to the ON position, or if it illuminates whilst the vehicle is being driven, have the system inspected by a professional workshop. Kia recommends to visit an authorised Kia dealer/service partner.*

⚠ WARNING

- **The driver is responsible for the proper position of the passenger's front air bag ON/OFF switch.**
- **Deactivate the passenger's front air bag only when the ignition switch is switched off, or the malfunction may occur in the SRS Control Module.**

  And there may be a danger that the driver's and/or front passenger's and/or side and curtain air bag may fail to trigger, or not trigger correctly during a collision.
- **Never install a rearward facing child seat on the front passenger's seat unless the passenger's front air bag has been deactivated. The infant or child could be severely injured or killed by an air bag deployment in case of an accident.**

(Continued)

(Continued)

- **Even though your vehicle is equipped with the passenger's front air bag ON/OFF switch, do not install a child restraint system in the front passenger's seat. A child restraint system must never be placed in the front seat. Children who are too large for child restraint systems should always occupy the rear seat and use the available lap/shoulder belts. Children are afforded the most safety in the event of an accident when they are restrained by a proper restraint system in the rear seat.**
- **As soon as the child seat is no longer needed on the front passenger's seat, reactivate the front passenger's air bag.**

⚠ WARNING - No attaching objects

No objects (such as crash pad cover, mobile phone holder, cup holder, perfume or stickers) should be placed over or near the air bag modules on the steering wheel, instrument panel, windscreen glass, and the front passenger's panel above the glove box. Such objects could cause harm if the vehicle is in a crash severe enough to cause the air bags to deploy. Do not place any objects over the air bag or between the air bag and yourself.

Side air bag (if equipped)

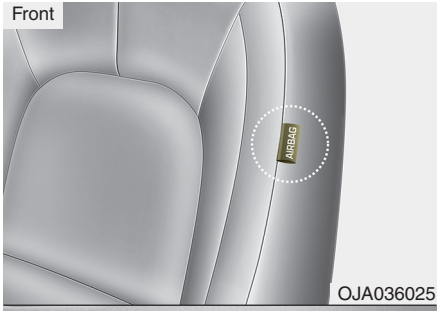

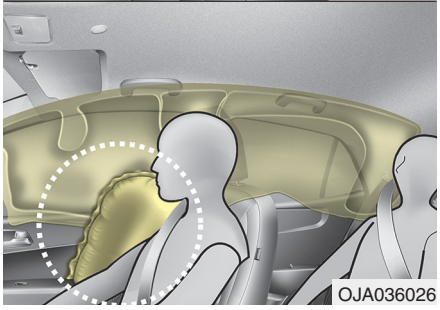

Your vehicle is equipped with a side air bag in each front seat. The purpose of the air bag is to provide the vehicle's driver and the front passenger with additional protection than that offered by the seat belt alone.

The side air bags are designed to deploy only during certain side-impact collisions, depending on the crash severity, angle, speed and point of impact. The side air bags are not designed to deploy in all side impact situations.

⚠ WARNING

Do not allow the passengers to lean their heads or bodies onto doors, put their arms on the doors, stretch their arms out of the window, or place objects between the doors and passengers when they are seated on seats equipped with side and/or curtain air bags.

✻ NOTICE - if equipped with rollover sensor

- **Also, both side of the side air bags deploy in certain rollover situations.**
- **The side air bag may deploy when the rollover sensor detects the situation as a rollover.**

⚠ WARNING

- **The side air bag is supplemental to the seat belt systems and is not a substitute for them. Therefore your seat belts must be worn at all times whilst the vehicle is in motion. The air bags deploy only in certain side impact or rollover*1 conditions severe enough to cause significant injury to the vehicle occupants.**
- **For best protection from the side air bag system and to avoid being injured by the deploying side air bag, both front and all rear (if equipped) seat occupants should sit in an upright position with the seat belt properly fastened.**

(Continued)

*1 Only vehicle equipped with rollover sensor.

(Continued)

- **Do not use any accessory seat covers.**
- **Use of seat covers could reduce or prevent the effectiveness of the system.**
- **To prevent unexpected deployment of the side air bag that may result in personal injury, avoid impact to the side impact sensor when the ignition switch is on.**
- **If the seat or seat cover is damaged, have the system serviced by a professional workshop.**

  Kia recommends to visit an authorised Kia dealer/service partner.
- **Never place or insert any object into any small opening near side airbag labels attached to the vehicle seats. When the air bag deploys, the object may affect the deployment and result in unexpected accident or bodily harm.**

⚠ WARNING - No attaching objects

- **Do not place any objects over the air bag or between the air bag and yourself. Also, do not attach any objects around the area the air bag inflates such as the door, side door glass, front and rear pillar.**
- **Do not place any objects between the door and the seat. They may become dangerous projectiles if the side air bag inflates.**
- **Do not install any accessories on the side or near the side air bags.**
- **Do not hang heavy items on the coat hooks for safety reasons.**

Curtain air bag (if equipped)

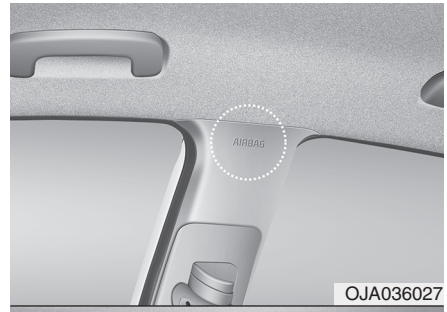

OJA036027

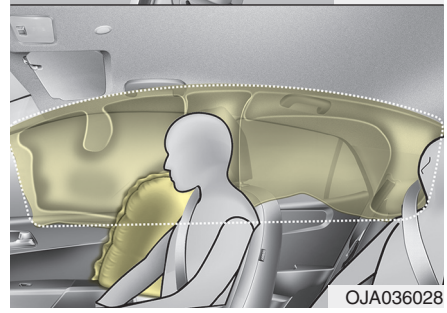
OJA036028

Curtain air bags are located along both sides of the roof rails above the centre pillar.

They are designed to help protect the heads of the front seat occupants and the rear outboard seat occupants in certain side impact collisions.

The curtain air bags are designed to deploy only during certain side impact collisions, depending on the crash severity, angle, speed and impact. The curtain air bags are not designed to deploy in all side impact situations, collisions from the front or rear of the vehicle or in most rollover situations.

✻ NOTICE - if equipped with rollover sensor

- **Also, both sides of the curtain air bags deploy in certain rollover situations.**
- **The curtain air bag may deploy when the rollover sensor detects the situation as a rollover.**

⚠ WARNING

- **In order for side and curtain air bags to provide their best protection, front seat occupants and outboard rear occupants should sit in an upright position with the seat belts properly fastened. Importantly, children should sit in a proper child restraint system in the rear seat.**
- **When children are seated in the rear outboard seats, they must be seated in the proper child restraint system. Make sure to position the child restraint system as far away from the door side as possible, and secure the child restraint system in a locked position.**

(Continued)

(Continued)

- **Do not allow the passengers to lean their heads or bodies onto doors, put their arms on the doors, stretch their arms out of the window, or place objects between the doors and passengers when they are seated on seats equipped with side and/or curtain air bags.**
- **Never try to open or repair any components of the side curtain air bag system. If necessary, have the system serviced by a professional workshop. Kia recommends to visit an authorised Kia dealer/service partner.**

Failure to follow the above instructions can result in injury or death to the vehicle occupants in an accident.

⚠ WARNING - No attaching objects

- **Do not place any objects over the air bag. Also, do not attach any objects around the area the air bag inflates such as the door, side door glass, front and rear pillar, roof side rail.**
- **Do not hang hard or breakable objects on the clothes hanger.**

Why didn't my air bag go off in a collision? (Inflation and non-inflation conditions of the air bag)

There are many types of accidents in which the air bag would not be expected to provide additional protection.

These include rear impacts, second or third collisions in multiple impact accidents, as well as low speed impacts.

Air bag collision sensors

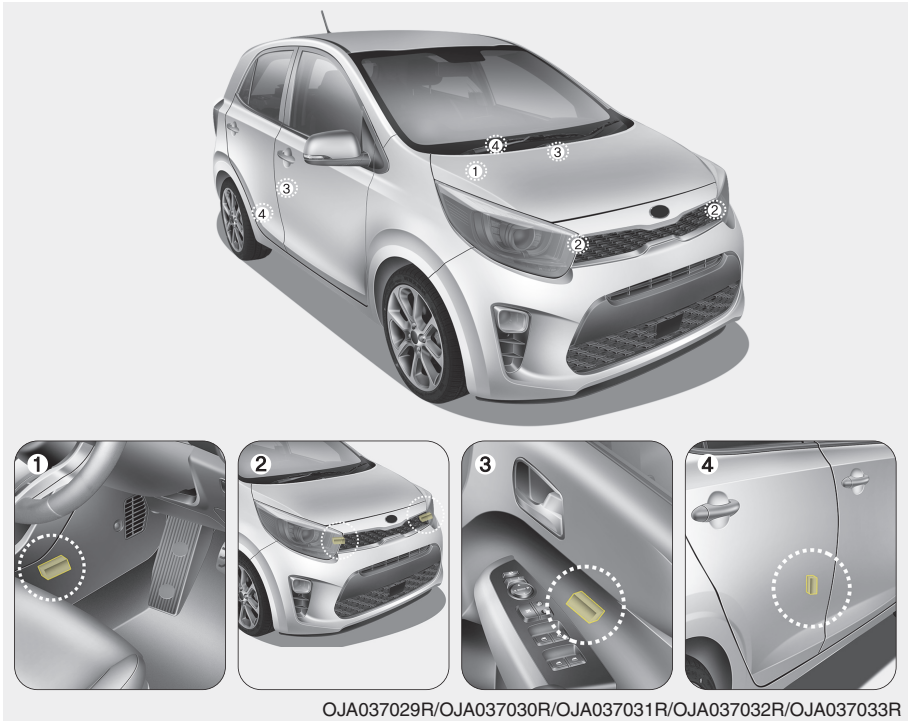

OJA037029R/OJA037030R/OJA037031R/OJA037032R/OJA037033R

1. SRS control module / Rollover sensor (if equipped)
2. Front impact sensor
3. Side impact sensor (if equipped)
4. Side impact sensor (if equipped)

⚠ WARNING

- **Do not hit or allow any objects to impact the locations where air bags or sensors are installed.**

  This may cause unexpected air bag deployment, which could result in serious personal injury or death.
- **If the installation location or angle of the sensors is altered in any way, the air bags may deploy when they should not or they may not deploy when they should, causing severe injury or death.**

  Therefore, do not try to perform maintenance on or around the air bag sensors. Have the system serviced by a professional workshop. Kia recommends to visit an authorised Kia dealer/service partner.

(Continued)

(Continued)

- **Problems may arise if the sensor installation angles are changed due to the deformation of the front bumper, body or B pillars where side collision sensors are installed. In this case, have the system serviced by a professional workshop. Kia recommends to visit an authorised Kia dealer/service partner.**
- **Your vehicle has been designed to absorb impact and deploy the air bag(s) in certain collisions. Installing bumper guards or replacing a bumper with non-genuine parts may adversely affect your vehicle's collision and air bag deployment performance.**

Air bag inflation conditions



Front air bags

Front air bags are designed to inflate in a frontal collision depending on the intensity, speed or angles of impact of the front collision.

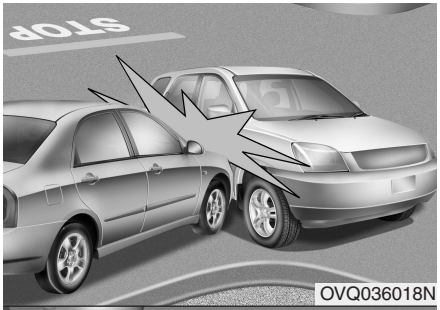

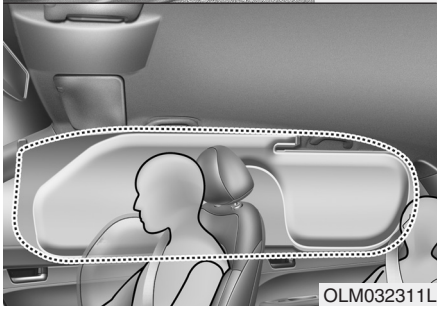

Side and curtain air bags (if equipped)

Side and curtain air bags are designed to inflate when an impact is detected by side collision sensors depending on the strength, speed or angles of impact resulting from a side impact collision.

Although the front air bags (driver's and front passenger's air bags) are designed to inflate only in frontal collisions, they also may inflate in other types of collisions if the front impact sensors detect a sufficient impact. Side impact and curtain air bags are designed to inflate only in side impact collisions, but they may inflate in other collisions if the side impact sensors detect a sufficient impact.

If the vehicle chassis is impacted by bumps or objects on unimproved roads, the air bags may deploy. Drive carefully on unimproved roads or on surfaces not designed for vehicle traffic to prevent unintended air bag deployment.

✻ NOTICE - If equipped with rollover sensor

Also, the side and curtain air bags are designed to inflate when a rollover is detected by a rollover sensor.

Air bag non-inflation conditions


OYB036045R

- In certain low-speed collisions the air bags may not deploy. The air bags are designed not to deploy in such cases because they may not provide benefits beyond the protection of the seat belts in such collisions.

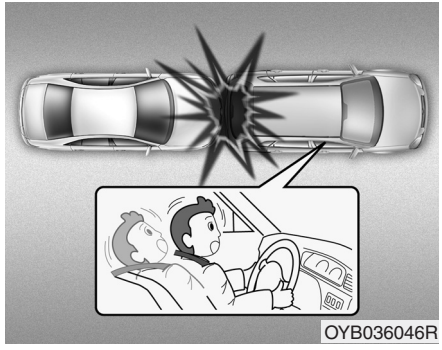
OYB036046R

- Frontal air bags are not designed to inflate in rear collisions, because occupants are moved backward by the force of the impact. In this case, inflated air bags would not be able to provide any additional benefit.



OVQ036018N

- Front air bags may not inflate in side impact collisions, because occupants move to the direction of the collision, and thus in side impacts, frontal air bag deployment would not provide additional occupant protection.

  However, side impact and curtain air bags may inflate depending on the intensity, vehicle speed and angles of impact.

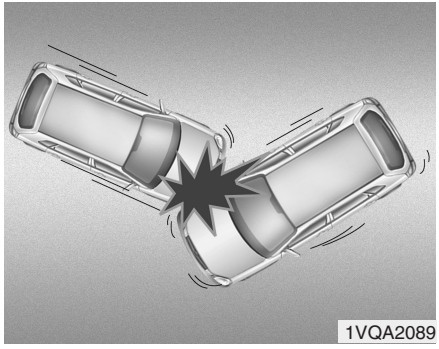

- In an angled collision, the force of impact may direct the occupants in a direction where the air bags would not be able to provide any additional benefit, and thus the sensors may not deploy any air bags.

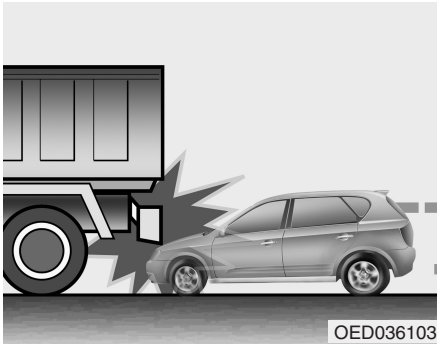

- Just before impact, drivers often brake heavily. Such heavy braking lowers the front portion of the vehicle causing it to “ride” under a vehicle with a higher ground clearance. Air bags may not inflate in this "under-ride" situation because deceleration forces that are detected by sensors may be significantly reduced by such “under-ride” collisions.

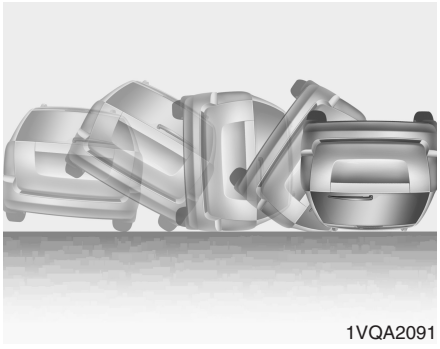

- Air bags do not inflate in most rollover accidents, even though the vehicle is equipped with side air bags and curtain air bags.

✻ NOTICE - If equipped with rollover sensor

However, if equipped with side and curtain air bags, the air bags may inflate in a rollover, when it is detected by the rollover sensor.

✻ NOTICE - Without rollover sensor

However, side and/or curtain air bags may inflate when the vehicle is rolled over by a side impact collision, if the vehicle is equipped with side air bags and curtain air bags.

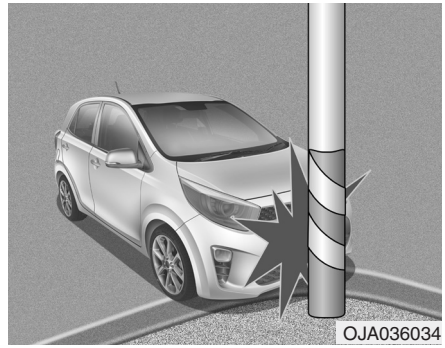

- Air bags may not inflate if the vehicle collides with objects such as utility poles or trees, where the point of impact is concentrated to one area and the full force of the impact is not delivered to the sensors.

SRS Care

The SRS is virtually maintenance-free and so there are no parts you can safely service by yourself. If the SRS air bag warning light does not illuminate, or continuously remains on, have the system inspected by a professional workshop.

Kia recommends to visit an authorised Kia dealer/service partner.

⚠ WARNING

- **Modification to SRS components or wiring, including the addition of any kind of badges to the pad covers or modifications to the body structure, can adversely affect SRS performance and lead to possible injury.**

(Continued)

(Continued)

- **For cleaning the air bag pad covers, use only a soft, dry cloth or one which has been moistened with plain water. Solvents or cleaners could adversely affect the air bag covers and proper deployment of the system.**
- **No objects should be placed over or near the air bag modules on the steering wheel, instrument panel, and the front passenger's panel above the glove box, because any such object could cause harm if the vehicle is in a crash severe enough to cause the air bags to inflate.**
- **If the air bags inflate, have the system replaced by a professional workshop.**

  Kia recommends to visit an authorised Kia dealer/service partner.

(Continued)

(Continued)

- **Do not tamper with or disconnect SRS wiring, or other components of the SRS system. Doing so could result in injury, due to accidental inflation of the air bags or by rendering the SRS inoperative.**
- **If components of the air bag system must be discarded, or if the vehicle must be scrapped, certain safety precautions must be observed. An authorised Kia dealer knows these precautions and can give you the necessary information. Failure to follow these precautions and procedures could increase the risk of personal injury.**
- **If your car was flooded and has soaked carpeting or water on flooring, you shouldn't try to start the engine; in this case, have your vehicle inspected by a professional workshop. Kia recommends to contact an authorised Kia dealer/service partner.**

Additional safety precautions

- **Never let passengers ride in the cargo area or on top of a folded-down back seat.** All occupants should sit upright, fully back in their seats with their seat belts on and their feet on the floor.
- **Passengers should not move out of or change seats whilst the vehicle is moving.** A passenger who is not wearing a seat belt during a crash or emergency stop can be thrown against the inside of the vehicle, against other occupants, or out of the vehicle.
- **Each seat belt is designed to restrain one occupant.** If more than one person uses the same seat belt, they could be seriously injured or killed in a collision.
- **Do not use any accessories on seat belts.** Devices claiming to improve occupant comfort or reposition the seat belt can reduce the protection provided by the seat belt and increase the chance of serious injury in a crash.

- **Passengers should not place hard or sharp objects between themselves and the air bags.** Carrying hard or sharp objects on your lap or in your mouth can result in injuries if an air bag inflates.
- **Keep occupants away from the air bag covers.** All occupants should sit upright, fully back in their seats with their seat belts on and their feet on the floor. If occupants are too close to the air bag covers, they could be injured if the air bags inflate.
- **Do not attach or place objects on or near the air bag covers.** Any object attached to or placed on the front or side air bag covers could interfere with the proper operation of the air bags.
- **Do not modify the front seats.** Modification of the front seats could interfere with the operation of the supplemental restraint system sensing components or side air bags.
- **Do not place items under the front seats.** Placing items under the front seats could interfere with the operation of the supplemental restraint system sensing components and wiring harnesses.
- **Never hold an infant or child on your lap.** The infant or child could be seriously injured or killed in the event of a crash. All infants and children should be properly restrained in appropriate child safety seats or seat belts in the rear seat.

⚠ WARNING

- **Sitting improperly or out of position can cause occupants to be shifted too close to a deploying air bag, strike the interior structure or be thrown from the vehicle resulting in serious injury or death.**
- **Always sit upright with the seatback in an upright position, centred on the seat cushion with your seat belt on, legs comfortably extended and your feet on the floor.**

Adding equipment to or modifying your air bag-equipped vehicle

If you modify your vehicle by changing your vehicle's frame, bumper system, front end or side sheet metal or ride height, this may affect the operation of your vehicle's air bag system.

Air bag warning label (if equipped)

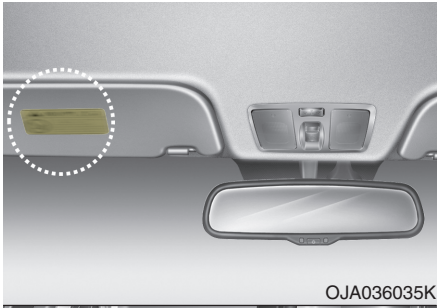

OJA036035K

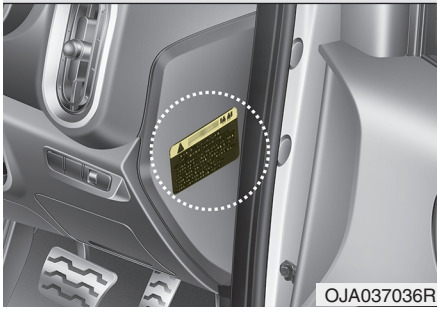

OJA037036R

Air bag warning labels are attached to alert the driver and passengers of potential risk of air bag system.

Note that these government warnings focus on the risk of children. We also want you to be aware of the risks which adults are exposed to. Those have been described in previous pages.

Features of your vehicle

Keys 4-4
- Record your key number 4-4
- Key operations 4-4
- Immobiliser system 4-5

Remote keyless entry 4-8
- Remote keyless entry system operations 4-8
- Transmitter precautions 4-9
- Battery replacement 4-10

Smart key 4-12
- Smart key functions 4-12
- Smart key precautions 4-13

Theft-alarm system 4-15
- Armed stage 4-15
- Theft-alarm stage 4-17
- Disarmed stage 4-17

Door locks 4-19
- Operating door locks from outside the vehicle 4-19
- Operating door locks from inside the vehicle 4-20
- Impact sensing door unlock system 4-22
- Speed sensing door lock system 4-22
- Child-protector rear door lock 4-23

Tailgate 4-24
- Opening the tailgate 4-24
- Closing the tailgate 4-25

Windows 4-26
- Power windows 4-27
- Manual windows 4-31

Bonnet 4-32
- Opening the bonnet 4-32
- Bonnet open warning 4-33
- Closing the bonnet 4-33

Fuel filler lid 4-35
- Opening the fuel filler lid 4-35
- Closing the fuel filler lid 4-36
- Petrol reservoir in the engine room (Flex fuel vehicle, for Brazil and Paraguay) 4-36

Sunroof 4-39
- Sliding the sunroof 4-40
- Tilting the sunroof 4-41
- Sunshade 4-42
- Resetting the sunroof 4-43
- Sunroof open warning 4-43

Steering wheel 4-44
- Electric power steering 4-44
- Tilt steering 4-45
- Heated steering wheel 4-45
- Horn 4-46

Mirrors 4-47
• Inside rearview mirror 4-47
• Outside rearview mirror 4-48
Instrument cluster 4-51
• Instrument Cluster Control 4-52
• LCD Window Control 4-53
• Gauges 4-53
• Transaxle Shift Indicator 4-57
LCD Windows 4-58
• Over view 4-58
• Trip information (Trip computer) 4-58
• LCD Modes (for type B cluster) 4-63
• Service Mode 4-64
• User Settings Mode (for type B cluster) 4-64
Warning and indicator lights 4-71
• Warning lights 4-71
• Indicator Lights 4-78
Rear parking assist system 4-83
• Operation of the rear parking assist system 4-83
• Non-operational conditions of rear parking assist system 4-84
• Rear parking assist system precautions 4-85
• Self-diagnosis 4-86
Rearview camera 4-87
Lighting 4-88
• Battery saver function 4-88
• Headlight escort function 4-88
• Headlight welcome function 4-88
• Lighting control 4-89
• High beam operation 4-91
• Turn signals and lane change signals 4-92
• Front fog light 4-93
• Rear fog light 4-94
• Daytime running light 4-95
• Headlight levelling device 4-95
Wipers and washers 4-96
• Windscreen wipers (front) 4-97
• Windscreen washers (front) 4-97
• Heated washer nozzle 4-99
• Rear window wiper and washer switch 4-99
Interior light 4-101
• Map lamp/Room lamp 4-101
• Luggage room lamp 4-102
• Vanity mirror lamp 4-102
Defroster 4-103
• Rear window defroster 4-103

Manual climate control system 4-104
- Heating and air conditioning 4-105
- System operation 4-110
- Climate control air filter 4-112
- Air Conditioning refrigerant label 4-113
- Checking the amount of air conditioner refrigerant and compressor lubricant 4-113

Automatic climate control system 4-115
- Automatic heating and air conditioning 4-116
- Manual heating and air conditioning 4-117
- System operation 4-122
- Climate control air filter 4-125
- Air Conditioning refrigerant label 4-125
- Checking the amount of air conditioner refrigerant and compressor lubricant 4-126

Windshield defrosting and defogging 4-128
- Manual climate control system 4-128
- Automatic climate control system 4-129
- Defogging logic 4-130

Storage compartments 4-131
- Centre console storage 4-131
- Glove box 4-132
- Luggage net holder 4-132
- Luggage board 4-133
- Increase cargo space 4-134

Interior features 4-135
- Cigarette lighter 4-135
- Ashtray 4-135
- Cup holder 4-136
- Sunvisor 4-137
- Seat warmer 4-137
- Power outlet 4-139
- Digital clock 4-140
- Floor mat anchor(s) 4-141
- Shopping bag holder 4-142
- Clothes hanger 4-142

KEYS

Record your key number



The key code number is stamped on the key code tag attached to the key set. Should you lose your keys, Kia recommends to contact an authorised Kia dealer/service partner.

Remove the key code tag and store it in a safe place. Also, record the key code number and keep it in a safe and handy place, but not in the vehicle.

Key operations

Folding key

■ Folding key

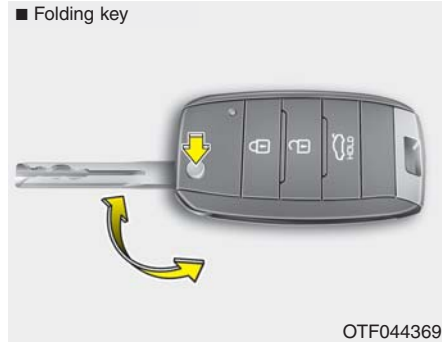

OTF044369

To unfold the key, press the release button then the key will unfold automatically.

To fold the key, fold the key manually whilst pressing the release button.

⚠ CAUTION

Do not fold the key without pressing the release button. This may damage the key.

Smart key

■ Smart key



OUM046431L

To remove the mechanical key, press and hold the release button (1) and remove the mechanical key (2).

To reinstall the mechanical key, put the key into the hole and push it until a click sound is heard.

⚠ WARNING - Ignition key (Smart key)

Leaving children unattended in a vehicle with the ignition key (smart key) is dangerous even if the key is not in the ignition switch or start button is ACC or ON position.

Children copy adults and they could place the key in the ignition switch or press the start button. The ignition key (smart key) would enable children to operate power windows or other controls, or even make the vehicle move, which could result in serious bodily injury or even death. Never leave the keys in your vehicle with unsupervised children, when the engine is running.

⚠ WARNING

Kia recommends to use parts for replacement from an authorised Kia dealer/service partner.

If an aftermarket key is used, the ignition switch may not return to ON after START. If this happens, the starter will continue to operate causing damage to the starter motor and possible fire due to excessive current in the wiring.

Immobiliser system

Your vehicle may be equipped with an electronic engine immobiliser system to reduce the risk of unauthorized vehicle use.

Your immobiliser system is comprised of a small transponder in the ignition key and electronic devices inside the vehicle.

Vehicles without smart key system

With the immobiliser system, whenever you insert your ignition key into the ignition switch and turn it to ON, it checks and determines and verifies if the ignition key is valid or not.

If the key is valid, the engine will start.

If the key is invalid, the engine will not start.

To deactivate the immobiliser system:

Insert the ignition key into the key cylinder and turn it to the ON position.

To activate the immobiliser system:

Turn the ignition key to the OFF position. The immobiliser system activates automatically. Without a valid ignition key for your vehicle, the engine will not start.

Vehicles with smart key system

Whenever the engine start/stop button is changed to the ON position, the immobiliser system checks and verifies if the key is valid or not.

If the key is valid, the engine will start.

If the key is invalid, the engine will not start.

To deactivate the immobiliser system

Change the engine start/stop button to the ON position.

To activate the immobiliser system

Change the engine start/stop button to the OFF position. The immobiliser system activates automatically. Without a valid smart key for your vehicle, the engine will not start.

⚠ WARNING

In order to prevent theft of your vehicle, do not leave spare keys anywhere in your vehicle. Your immobiliser password is a customer unique password and should be kept confidential. Do not leave this number anywhere in your vehicle.

✻ NOTICE

When starting the engine, do not use the key with other immobiliser keys around. Otherwise the engine may not start or may stop soon after it starts. Keep each key separate in order to avoid a starting malfunction.

⚠ CAUTION

Do not put metal accessories near the ignition switch. Metal accessories may interrupt the transponder signal and may prevent the engine from being started.

✻ NOTICE

If you need additional keys or lose your keys, Kia recommends to visit an authorised Kia dealer/service partner.

⚠ CAUTION

The transponder in your ignition key is an important part of the immobiliser system. It is designed to give years of trouble-free service, however you should avoid exposure to moisture, static electricity and rough handling. Immobiliser system malfunction could occur.

⚠ CAUTION

Do not change, alter or adjust the immobiliser system because it could cause the immobiliser system to malfunction. In this case, have the system serviced by a professional workshop. Kia recommends to visit an authorised Kia dealer/service partner.

Malfunctions caused by improper alterations, adjustments or modifications to the immobiliser system are not covered by your vehicle manufacturer warranty.

REMOTE KEYLESS ENTRY (IF EQUIPPED)

Remote keyless entry system operations

■ Folding key



OUM046432L

■ Smart Key



OUM046433L

Lock (1)

All doors (and tailgate) are locked if the lock button is pressed whilst all doors are closed.

The hazard warning lights will blink once to indicate that all doors are locked.

However, if any door, engine bonnet or tailgate remains open, the hazard warning lights will not operate. If all doors, engine bonnet and tailgate are closed after the lock button is pressed, the hazard warning lights will blink once.

Unlock (2)

All doors (and tailgate) are unlocked if the unlock button is pressed.

The hazard warning lights will blink twice to indicate that all doors are unlocked.

After pressing this button, the doors will lock automatically unless you open any door within 30 seconds.

Tailgate unlock (3) (if equipped)

The tailgate is unlocked if the button is pressed for more than 1 second.

The hazard warning lights will blink twice to indicate that the tailgate is unlocked.

However, after pressing this button, the tailgate will lock automatically unless you open the tailgate within 30 seconds.

Also, once the tailgate is opened and then closed, the tailgate will lock automatically.

❈ The word “HOLD” is written on the button to inform you that you must press and hold the button for 1 second.

Transmitter precautions

✻ NOTICE

The transmitter will not work if any of the following occurs:

- **The ignition key is in the ignition switch.**
- **You exceed the operating distance limit (about 10 m [30 feet]).**
- **The battery in the transmitter is weak.**
- **Other vehicles or objects may be blocking the signal.**
- **The weather is extremely cold.**
- **The transmitter is close to a radio transmitter such as a radio station or an airport which can interfere with normal operation of the transmitter.**

When the transmitter does not work correctly, open and close the door with the ignition key. If you have a problem with the transmitter, Kia recommends to contact an authorised Kia dealer/service partner.

(Continued)

(Continued)

- **If the transmitter is in close proximity to your cell phone or smart phone, the signal from the transmitter could be blocked by normal operation of your cell phone or smart phone. This is especially important when the phone is active such as making call, receiving calls, text messaging, and/or sending/ receiving emails.**
  Avoid placing the transmitter and your cell phone or smart phone in the same pants or jacket pocket and maintain adequate distance between the two devices.

⚠ CAUTION

- ***Keep the transmitter away from water or any liquid. If the keyless entry system is inoperative due to exposure to water or liquids, it will not be covered by your manufacturer vehicle warranty.***
- ***Keep the transmitter away from electromagnetic materials that blocks electromagnetic waves to the key surface.***

⚠ CAUTION

Changes or modifications not expressly approved by the party responsible for compliance could void the user's authority to operate the equipment. If the keyless entry system is inoperative due to changes or modifications not expressly approved by the party responsible for compliance, it will not be covered by your manufacturer's vehicle warranty.

Battery replacement

■ Folding key



OYDDCO2005

■ Smart Key

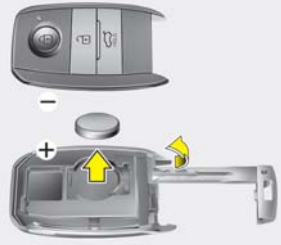

OXM043005

The transmitter uses a 3 volt lithium battery which will normally last for several years. When replacement is necessary, use the following procedure.

1. Insert a slim tool into the slot and gently pry open the transmitter centre cover.
2. Replace the battery with a new battery (CR2032). When replacing the battery, make sure the battery position.
3. Install the battery in the reverse order of removal.

For transmitter replacement, we recommend that you contact an authorised Kia dealer.

⚠ CAUTION

- *The keyless entry system transmitter is designed to give you years of trouble-free use, however it can malfunction if exposed to moisture or static electricity.*
- *If you are unsure how to use or replace the battery, Kia recommends to contact an authorised Kia dealer/service partner.*
- *Using the wrong battery can cause the transmitter or smart key to malfunction. Be sure to use the correct battery.*
- *To avoid damaging the transmitter or smart key, don't drop it, get it wet, or expose it to heat or sunlight.*

⚠ CAUTION

An inappropriately disposed battery can be harmful to the environment and human health.

Dispose the battery according to your local law(s) or regulation.

SMART KEY (IF EQUIPPED)



OXM043002

With a smart key, you can lock or unlock a door (and tailgate) and even start the engine without inserting the key.

The functions of buttons on a smart key are similar to the folding key.

Smart key functions



OJA047010R

Carrying the smart key, you may lock and unlock the vehicle doors (and tailgate). Also, you may start the engine. Refer to the following, for more details.

Locking

Pressing the button of the front outside door handles with all doors (and tailgate) closed and any door unlocked, locks all the doors (and tailgate). If all doors (and tailgate) and engine bonnet are closed, the hazard warning lights will blink once to indicate that all doors (and tailgate) are locked.

The button will only operate when the smart key is within 0.7~1 m (28~40 in.) from the outside door handle. If you want to make sure that a door has locked or not, you should check the door lock button inside the vehicle or pull the outside door handle.

Even though you press the outside door handle buttons, the doors will not lock and the chime will sound for 3 seconds if any of following occur:

- The smart key is in the vehicle.
- The ENGINE START/STOP button is in the ACC or ON position.
- Any door except the tailgate is open.

Unlocking

Pressing the button of the front outside door handles with all doors (and tailgate) closed and locked, unlocks all the doors (and tailgate). The hazard warning lights blink twice to indicate that all doors (and tailgate) are unlocked.

The button will only operate when the smart key is within 0.7~1 m (28~40 in.) from the outside door handle.

When the smart key is recognized in the area of 0.7~1 m (28~40 in.) from the front outside door handle, other people can also open the door without possession of the smart key.

After pressing the button, the doors will lock automatically unless you open any door within 30 seconds.

Tailgate unlocking

If you are within 0.7 m ~ 1 m (28 ~ 40 in.) from the outside tailgate handle, with your smart key in possession, the tailgate will unlock and open when you press the tailgate handle switch.

The hazard warning lights will blink twice to indicate that the tailgate is unlocked.

Also, once the tailgate is opened and then closed, the tailgate will lock automatically.

Start-up

You can start the engine without inserting the key. For detailed information refer to “Starting the engine with a smart key” in chapter 6.

Smart key precautions

✻ NOTICE

- **If, for some reason, you happen to lose your smart key, you will not be able to start the engine. Tow the vehicle, if necessary, contact a professional workshop. Kia recommends to contact an authorised Kia dealer/service partner.**
- **A maximum of 2 smart keys can be registered to a single vehicle. If you lose a smart key, Kia recommends to contact an authorised Kia dealer/service partner.**
- **The smart key will not work if any of the following occurs:**
  - **The smart key is close to a radio transmitter such as a radio station or an airport which can interfere with normal operation of the smart key.**
  - **The smart key is near a mobile two-way radio system or a mobile phone.**
  - **Another vehicle’s smart key is being operated close to your vehicle.**

(Continued)

(Continued)

When the smart key does not work properly, open and close the door with the mechanical key. If you have a problem with the smart key, Kia recommends to contact an authorised Kia dealer/service partner.

- **If the smart key is in close proximity to your cell phone or smart phone, the signal from the smart key could be blocked by normal operation of your cell phone or smart phone. This is especially important when the phone is active such as making call, receiving calls, text messaging, and/or sending/receiving emails. Avoid placing the smart key and your cell phone or smart phone in the same pants or jacket pocket and maintain adequate distance between the two devices.**

⚠ CAUTION

Keep the smart key away from water or any liquid. If the keyless entry system is inoperative due to exposure to water or liquids, it will not be covered by your manufacturer's vehicle warranty.

THEFT-ALARM SYSTEM (IF EQUIPPED)



OJC040170

Vehicles equipped with a theft alarm system will have a label attached to the vehicle with the following words:
1. WARNING
2. SECURITY SYSTEM

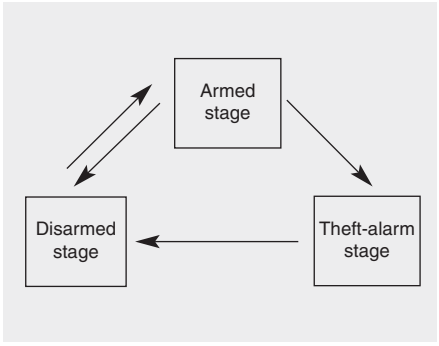

This system is designed to provide protection from unauthorized entry into the car. This system is operated in three stages: the first is the “Armed” stage, the second is the “Theft-alarm” stage, and the third is the “Disarmed” stage. If triggered, the system provides an audible alarm with blinking of the hazard warning lights.

Armed stage

Using the smart key

Park the vehicle and stop the engine. Arm the system as described below.

1. Turn off the engine.
2. Make sure that all doors (and tailgate) and the engine bonnet are closed and latched.
3. • Lock the doors by pressing the button of the front outside door handle with the smart key in your possession.

   After completion of the steps above, the hazard warning lights operate once to indicate that the system is armed.

   If any door remains open, the doors won't lock and the chime will sound for 3 seconds. Close the door and try again to lock the doors.

   If tailgate or engine bonnet remains open, the hazard warning lights won't operate and theft-alarm will not arm. After this, if the tailgate and engine bonnet are closed, the hazard warning lights will blink once.

• Lock the doors by pressing the lock button on the smart key.

After completion of the steps above, the hazard warning lights will operate once to indicate that the system is armed.

If any door (and tailgate) or engine bonnet remains open, the hazard warning lights won't operate and theft-alarm will not arm. After this, if all doors (and tailgate) and engine bonnet are closed, the hazard warning lights blink once.

Using the transmitter

Park the vehicle and stop the engine. Arm the system as described below.

1. Turn off the engine and remove the ignition key from the ignition switch.
2. Make sure that all doors (and tailgate), the engine bonnet are closed and latched.
3. Lock the doors by pressing the lock button on the transmitter.

   After completion of the steps above, the hazard warning lights will blink once to indicate that the system is armed.

   If any door (and tailgate) or engine bonnet remains open, the hazard warning lights won't operate and theft-alarm will not arm. After this, if all doors (and tailgate) and engine bonnet are closed, the hazard warning lights blink once.

• **Do not arm the system until all passengers have left the vehicle. If the system is armed whilst a passenger(s) remains in the vehicle, the alarm may be activated when the remaining passenger(s) leave the vehicle. If any door, tailgate or engine bonnet is opened within 30 seconds after entering the armed stage, the system is disarmed to prevent unnecessary alarm.**

Theft-alarm stage

The alarm will be activated if any of the following occurs whilst the system is armed.

- A door is opened without using the transmitter (or smart key).
- The tailgate is opened without using the transmitter (or smart key).
- The engine bonnet is opened.

The horn will sound and the hazard warning lights will blink continuously for approximately 30 seconds. To turn off the system, unlock the doors with the transmitter (or smart key).

Disarmed stage

The system will be disarmed when:

Transmitter

- The door unlock button is pressed.
- The engine is started.
- The ignition switch is in the “ON” position for 30 seconds or more.

Smart key

- The door unlock button is pressed.
- The button of the front outside door is pressed whilst carrying the smart key.
- The engine is started.

After the doors are unlocked, the hazard warning lights will blink twice to indicate that the system is disarmed.
After pressing the unlock button, if any door (or tailgate) is not opened within 30 seconds, the system will be rearmed.

✻ NOTICE - Non-immobiliser system

- **Avoid trying to start the engine whilst the alarm is activated. The vehicle starting motor is disabled during the theft-alarm stage.**
  If the system is not disarmed with the transmitter, insert the key into the ignition switch, turn the ignition switch to the ON position and wait for 30 seconds. Then the system will be disarmed.
- **If you lose your keys, Kia recommends to visit an authorised Kia dealer/service partner.**

✻ NOTICE - Immobiliser system

- **If the system is not disarmed with the transmitter, insert the key into the ignition switch and start the engine. Then the system will be disarmed.**
- **If you lose your keys, Kia recommends to visit an authorised Kia dealer/service partner.**

⚠ CAUTION

Do not change, alter or adjust the theft-alarm system because it could cause the theft-alarm system to malfunction. In this case, have the system serviced by a professional workshop. Kia recommends to visit an authorised Kia dealer/service partner.

Malfunctions caused by improper alterations, adjustments or modifications to the theft-alarm system are not covered by your vehicle manufacturer warranty.

DOOR LOCKS

Operating door locks from outside the vehicle

Mechanical key



- Turn the key toward the rear of the vehicle to lock and toward the front of the vehicle to unlock.
- If you lock/unlock the door with a key, the doors will lock/unlock.
- If you lock/unlock the driver's door with a key, all vehicle doors will lock/unlock automatically. (if equipped)
- From the driver's door, turn the key toward the front of the vehicle once to unlock the driver's door and once more within 4 seconds to unlock all doors. (if equipped)
- Once the doors are unlocked, they may be opened by pulling the door handle.
- When closing the door, push the door by hand. Make sure that doors are closed securely.

Transmitter/Smart key

- Doors can be locked and unlocked with the transmitter (or smart key). (if equipped)
- Doors can be locked and unlocked pressing the button of the outside door handle with the smart key in your possession.
- From the driver's door, press the unlock button once to unlock the driver's door and once more within 4 seconds to unlock all doors. (if equipped)
- Once the doors are unlocked, they may be opened by pulling the door handle.
- When closing the door, push the door by hand. Make sure that doors are closed securely.

✻ NOTICE

- **In cold and wet climates, door locks and door mechanisms may not work properly due to freezing conditions.**
- **If the door is locked/unlocked multiple times in rapid succession with either the vehicle key or door lock switch, the system may stop operating temporarily in order to protect the circuit and prevent damage to system components.**

⚠ WARNING

- **If you don't close the door securely, the door may open again.**
- **Be careful that someone's body and hands are not trapped when closing the door.**

⚠ WARNING

If people must spend a longer time in the vehicle whilst it is very hot or cold outside, there is risk of injuries or danger to life. Do not lock the vehicle from the outside when there are people in it.

⚠ CAUTION

Do not frequently repeat opening and closing of doors, or apply excessive force to a door whilst the door closer is operating.

Operating door locks from inside the vehicle

With the door lock button

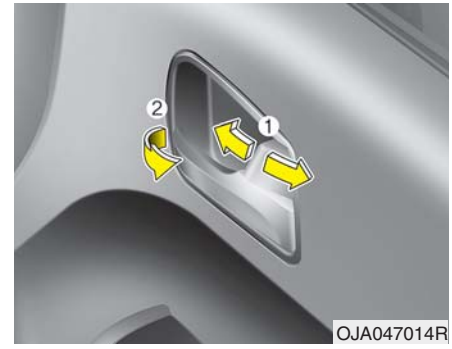

- To unlock a door, pull the door lock button (1) to the “Unlock” position. The red mark on the button will be visible.
- To lock a door, push the door lock button to the “Lock” position. If the door is locked properly, the red mark on the door lock button will not be visible.
- To open a door, pull the door handle (2) outward.

- If the inner door handle of the driver's (or front passenger's) door is pulled when the door lock button is in the lock position, the button will unlock and the door will open. (if equipped)
- Front door cannot be locked if the ignition key is in the ignition switch (or if the smart key is in the vehicle) and the front door is opened.

⚠ WARNING - Door lock malfunction

If a power door lock ever fails to function whilst you are in the vehicle, try one or more of the following techniques to exit:

- **Operate the door unlock feature repeatedly (both electronic and manual) whilst simultaneously pulling on the door handle.**
- **Operate the other door locks and handles, front and rear.**
- **Lower a front window and use the key to unlock the door from outside.**
- **Move to the cargo area and open the tailgate.**

⚠ WARNING

Do not pull the inner door handle of driver's (or passenger's) door whilst the vehicle is moving.

With central door lock switch

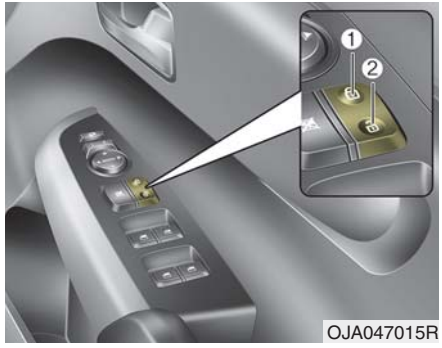

Operate by pressing the central door lock switch.

- When pressing the (🔒) portion (1) of the switch, all vehicle doors will lock.
- When pressing the (🔓) portion (2) of the switch, all vehicle doors will unlock.
- If the key is in the ignition switch (or if the smart key is in the vehicle) and any door is opened, the doors will not lock even though the (🔒) portion (1) of the central door lock switch is pressed.

⚠ WARNING - Doors

- **The doors should always be fully closed and locked whilst the vehicle is in motion to prevent accidental opening of the door. Locked doors will also discourage potential intruders when the vehicle stops or slows down.**
- **Be careful when opening doors and watch for vehicles, motorcycles, bicycles or pedestrians approaching the vehicle in the path of the door. Opening a door when something is approaching can cause damage or injury.**

⚠ WARNING - Unlocked vehicles

Leaving your vehicle unlocked can invite theft or possible harm to you or others from someone hiding in your vehicle whilst you are gone. Always remove the ignition key, engage the parking brake, close all windows and lock all doors when leaving your vehicle unattended.

⚠ WARNING - Unattended children

An enclosed vehicle can become extremely hot, causing death or severe injury to unattended children or animals who cannot escape the vehicle. Furthermore, children might operate features of the vehicle that could injure them, or they could encounter other harm, possibly from someone gaining entry to the vehicle. Never leave children or animals unattended in your vehicle.

Impact sensing door unlock system (if equipped)

All doors will automatically unlock after an impact causes the air bags to deploy.

Speed sensing door lock system (if equipped)

All doors will be automatically locked after the vehicle speed exceeds 15 km/h. And all doors will be automatically unlocked when you turn the engine off and when you remove the ignition key. (if equipped)

Child-protector rear door lock

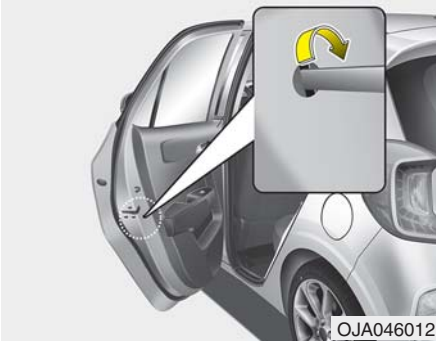

The child safety lock is provided to help prevent children from accidentally opening the rear doors from inside the vehicle. The rear door safety locks should be used whenever children are in the vehicle.

1. Open the rear door.
2. Insert a key (or screwdriver) into the hole and turn it to the lock ( ) position. When the child safety lock is in the lock position, the rear door will not open even though the inner door handle is pulled.
3. Close the rear door.

To open the rear door, pull the outside door handle.

Even though the doors may be unlocked, the rear door will not open by pulling the inner door handle until the rear door child safety lock is unlocked.

⚠ WARNING - Rear door locks

If children accidentally open the rear doors whilst the vehicle is in motion, they could fall out and be severely injured or killed. To prevent children from opening the rear doors from the inside, the rear door safety locks should be used whenever children are in the vehicle.

TAILGATE

Opening the tailgate

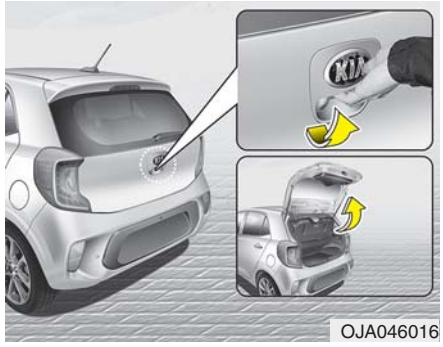

- The tailgate is locked or unlocked when all doors are locked or unlocked with the transmitter (or smart key) or central door lock switch.
- If unlocked, the tailgate can be opened by pressing the handle and pulling it up.
- When all doors are lock if the tailgate unlock button on the smart key is pressed for more than 1 second, the tailgate is unlocked. Once the tailgate is opened and then closed, the tailgate is locked automatically.

❈ There is not the key hole.

✻ NOTICE

In cold and wet climates, door lock and door mechanisms may not work properly due to freezing conditions.

⚠ WARNING

The tailgate swings upward. Make sure no objects or people are near the rear of the vehicle when opening the tailgate.

⚠ CAUTION

Make certain that you close the tailgate before driving your vehicle. Possible damage may occur to the tailgate lift cylinders and attached hardware if the tailgate is not closed prior to driving.

Closing the tailgate


OJA046034

To close the tailgate, lower and push down the tailgate firmly. Make sure that the tailgate is securely latched.

⚠ WARNING

Make sure your hands, feet and other parts of your body are safely out of the way before closing the tailgate.

⚠ CAUTION

Make sure nothing is near the tailgate latch and striker whilst closing the tailgate. It may damage the tailgate's latch.

⚠ WARNING - Exhaust fumes

If you drive with the tailgate open, you will draw dangerous exhaust fumes into your vehicle which can cause serious injury or death to vehicle occupants.

If you must drive with the tailgate open, keep the air vents and all windows open so that additional outside air comes into the vehicle.

⚠ WARNING - Rear cargo area

Occupants should never ride in the rear cargo area where no restraints are available. To avoid injury in the event of an accident or sudden stops, occupants should always be properly restrained.

⚠ WARNING

No one should be allowed to occupy the luggage compartment of the vehicle at any time. The luggage compartment is a very dangerous location in the event of a crash.

WINDOWS

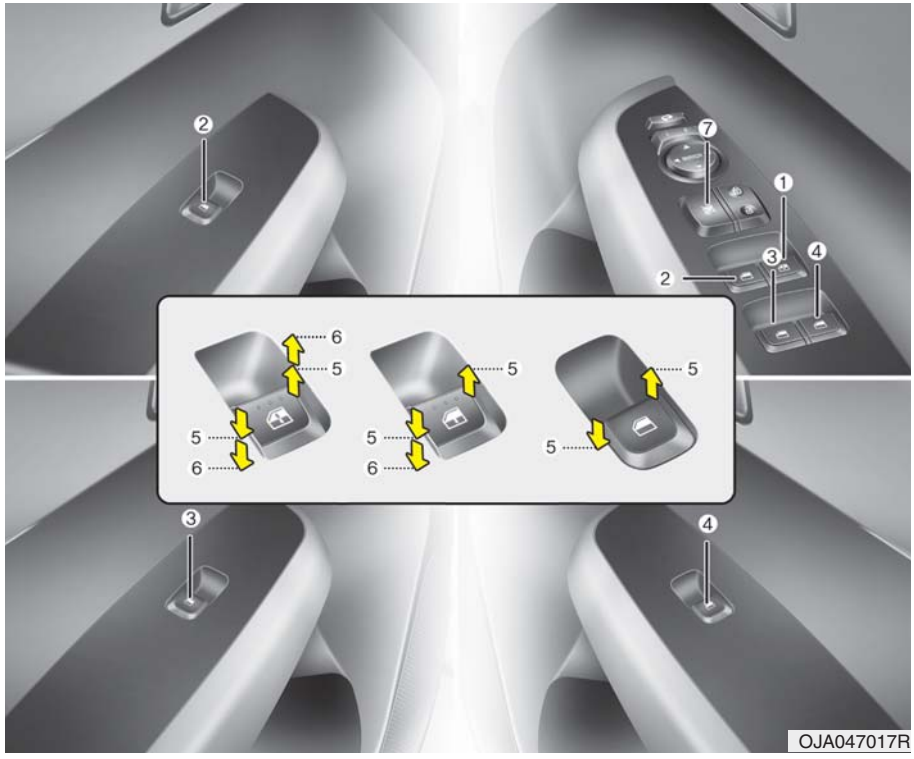

(1) Driver's door power window switch
(2) Front passenger's door power window switch
(3) Rear door (left) power window switch*
(4) Rear door (right) power window switch*
(5) Window opening and closing
(6) Automatic power window up*/down* (Driver's window)
(7) Power window lock switch*

* : if equipped

✻ NOTICE

In cold and wet climates, power windows may not work properly due to freezing conditions.

Power windows (if equipped)

The ignition switch must be in the ON position for power windows to operate.

Each door has a power window switch that controls the door's window. The driver has a power window lock switch which can block the operation of rear passenger windows. The power windows can be operated for approximately 30 seconds after the ignition key is removed or turned to the ACC or LOCK position. However, if the front doors open, the power windows cannot be operated within the 30 second period after ignition key removal (if equipped).

If the window cannot be close because it is blocked by objects, remove the objects and close the window.

✻ NOTICE

Whilst driving with the rear windows down or with the sunroof (if equipped) in an open (or partially open position), your vehicle may demonstrate a wind buffeting or pulsation noise. This noise is a normal occurrence and can be reduced or eliminated by taking the following actions. If the noise occurs with one or both of the rear windows down, partially lower both front windows approximately one inch. If you experience the noise with the sunroof open, slightly reduce the size of the sunroof opening.

⚠ WARNING

Do not install any accessories in the area of windows. It may impact jam protection.

Window opening and closing



The driver's door has a master power window switch that controls all the windows in the vehicle.

To open or close a window, press down or pull up the front portion of the corresponding switch to the first detent position (5).

Auto down window (if equipped)

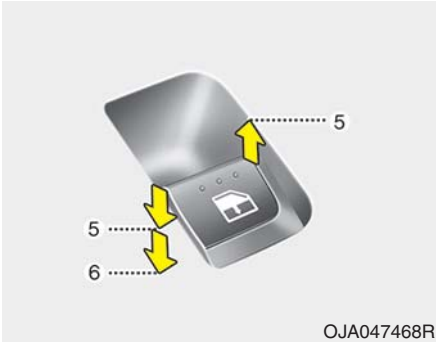

OJA047468R

Pressing the power window switch momentarily to the second detent position (6) completely lowers the window even when the switch is released. To stop the window at the desired position whilst the window is in operation, pull up the switch momentarily to the opposite direction of the window movement.

Auto up/down window (if equipped)

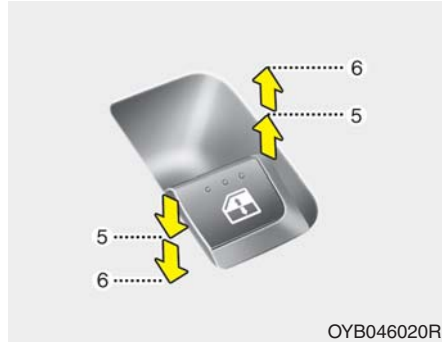

OYB046020R

Pressing or pulling up the power window switch momentarily to the second detent position (6) completely lowers or lifts the window even when the switch is released. To stop the window at the desired position whilst the window is in operation, pull up or press and release the switch to the opposite direction of the movement.

If the power window is not operated correctly, the automatic power window system must be reset as follows:

1. Turn the ignition switch to the ON position.
2. Close the window and continue pulling up on the driver's power window switch for at least 1 second after the window is completely closed.

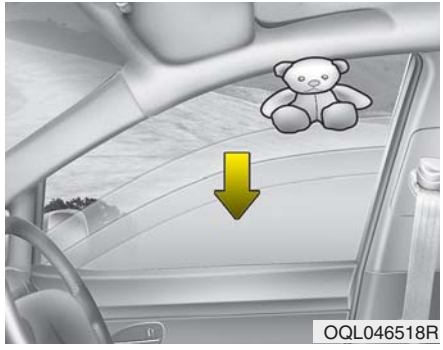

Automatic reversal

If the upward movement of the window is blocked by an object or part of the body, the window will detect the resistance and will stop upward movement. The window will then lower approximately 30 cm (11.8 in.) to allow the object to be cleared.

If the window detects the resistance whilst the power window switch is pulled up continuously, the window will stop upward movement then lower approximately 2.5 cm (1 in.).

And if the power window switch is pulled up continuously again within 5 seconds after the window is lowered by the automatic window reversal feature, the automatic window reversal will not operate.

✻ NOTICE

The automatic reverse feature for the driver's window is only active when the "auto up" feature is used by fully pulling up the switch. The automatic reverse feature will not operate if the window is raised using the halfway position on the power window switch.

⚠ WARNING

Always check for obstructions before raising any window to avoid injuries or vehicle damage. If an object less than 4 mm (0.16 in.) in diameter is caught between the window glass and the upper window channel, the automatic reverse window may not detect the resistance and will not stop and reverse direction.

⚠ WARNING

The automatic reverse feature doesn't activate whilst resetting power window system.

Make sure body parts or other objects are safely out of the way before closing the windows to avoid injuries or vehicle damage.

Power window lock button (if equipped)

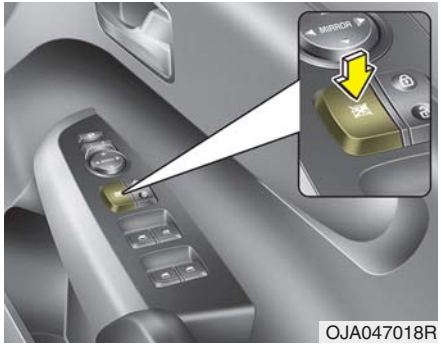

- The driver can disable the power window switches on the rear passenger doors by pressing the power window lock button located on the driver's door to the LOCK position (pressed).
- **When the power window lock button is in the LOCK position (pressed), the driver's master control can operate all power windows.**

⚠ CAUTION

- ***To prevent possible damage to the power window system, do not open or close two windows or more at the same time. This will also ensure the longevity of the fuse.***
- ***Never try to operate the main switch on the driver's door and the individual door window switch in opposite directions at the same time. If this is done, the window will stop and cannot be opened or closed.***

⚠ WARNING - Windows

- **NEVER leave the ignition key in the vehicle with unsupervised children, when the engine is running.**
- **NEVER leave any child unattended in the vehicle. Even very young children may inadvertently cause the vehicle to move, entangle themselves in the windows, or otherwise injure themselves or others.**
- **Always double check to make sure all arms, hands, head and other obstructions are safely out of the way before closing a window.**
- **Do not allow children to play with the power windows. Keep the driver's door power window lock button in the LOCK position (pressed). Serious injury can result from unintentional window operation by the child.**
- **Do not extend a face or arms outside through the window opening whilst driving.**

Manual windows (if equipped)

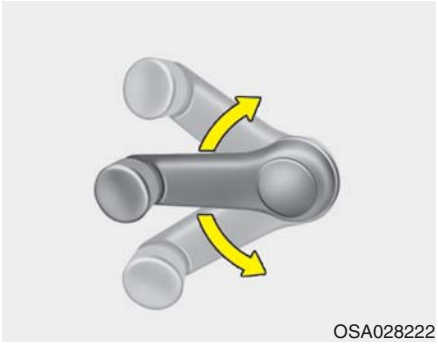

OSA028222

To raise or lower the window, turn the window regulator handle clockwise or counterclockwise.

⚠ WARNING

When opening or closing the windows, make sure your passenger's arms, hands and body are safely out of the way.

BONNET

Opening the bonnet

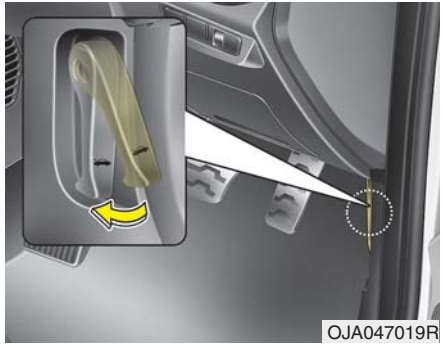

1. Pull the release lever to unlatch the bonnet. The bonnet should pop open slightly.

⚠ WARNING

Open the bonnet after turning off the engine on a flat surface, shifting the shift lever to the P(Park) position for automatic transaxle and to the 1st(First) gear or R(Reverse) for manual transaxle, and setting the parking brake.

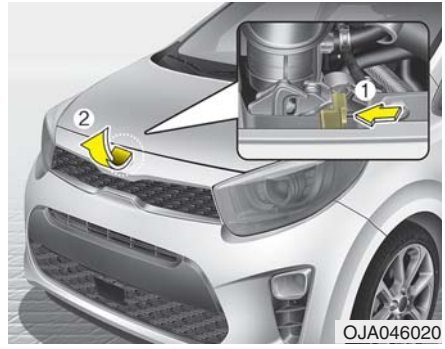

2. Go to the front of the vehicle, raise the bonnet slightly, push the secondary latch (1) inside of the bonnet centre and lift the bonnet (2).

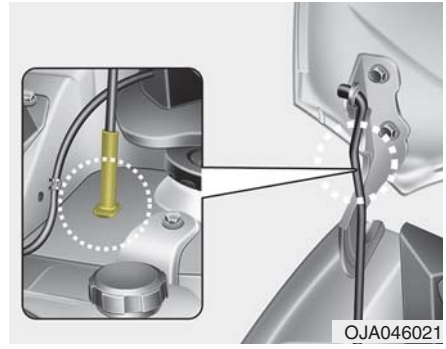

3. Pull the support rod from the bonnet.
4. Hold the bonnet open with the support rod.

⚠ WARNING - Hot parts

Grasp the support rod in the area wrapped in yellow cap.

The cap will help prevent you from being burned by hot metal when the engine is hot.

Bonnet open warning (if equipped)

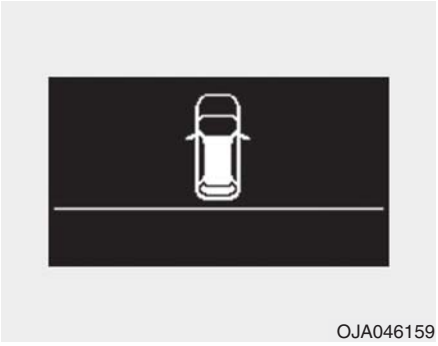

OJA046159

The warning message (for Type B cluster) will appear on the LCD display when bonnet is open.

The warning chime will operate when the vehicle is being driven above 3 km/h (2 mph) with the bonnet open.

Closing the bonnet

1. Before closing the bonnet, check the following:
   - All filler caps in engine compartment must be correctly installed.
   - Gloves, rags or any other combustible material must be removed from the engine compartment.
2. Return the support rod to its clip to prevent it from rattling.
3. Lower the bonnet until it is about 30 cm above the closed position and let it drop. Make sure that it locks into place.
4. Check that the bonnet has engaged properly. If the bonnet can be raised slightly, it is not properly engaged.

   Open it again and close it with a little more force.

⚠ WARNING

- **Before closing the bonnet, ensure that all obstructions are removed from the bonnet opening. Closing the bonnet with an obstruction present in the bonnet opening may result in property damage or severe personal injury.**
- **Do not leave gloves, rags or any other combustible material in the engine compartment. Doing so may cause a heat-induced fire.**

⚠ WARNING

- **Always double check to be sure that the bonnet is firmly latched before driving away. If it is not latched, the bonnet could fly open whilst the vehicle is being driven, causing a total loss of visibility, which might result in an accident.**
- **The support rod must be inserted completely into the hole provided in the bonnet whenever you inspect the engine compartment. This will prevent the bonnet from falling and possibly injuring you.**
- **Do not move the vehicle with the bonnet raised. The view will be blocked and the bonnet could fail or be damaged.**

FUEL FILLER LID

Opening the fuel filler lid


OJA047022R

The fuel-filler lid must be opened from inside the vehicle by pulling up on the fuel-filler lid opener located on the front floor area on the driver's seat.

✻ NOTICE

If the fuel filler lid will not open because ice has formed around it, tap lightly or push on the lid to break the ice and release the lid. Do not pry on the lid. If necessary, spray around the lid with an approved de-icer fluid (do not use radiator anti-freeze) or move the vehicle to a warm place and allow the ice to melt.

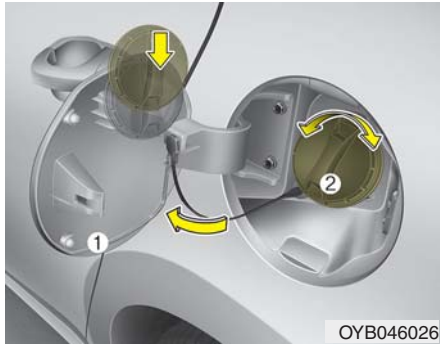

OYB046026

1. Stop the engine.
2. To open the fuel filler lid, pull up the fuel filler lid opener.
3. Pull the fuel filler lid (1) out to fully open.
4. To remove the cap, turn the fuel tank cap (2) counterclockwise.
5. Refuel as needed.

Closing the fuel filler lid

1. To install the cap, turn it clockwise until it “clicks”. This indicates that the cap is securely tightened.
2. Close the fuel filler lid and push it lightly and make sure that it is securely closed.

Petrol reservoir in the engine room (Flex fuel vehicle, for Brazil and Paraguay)

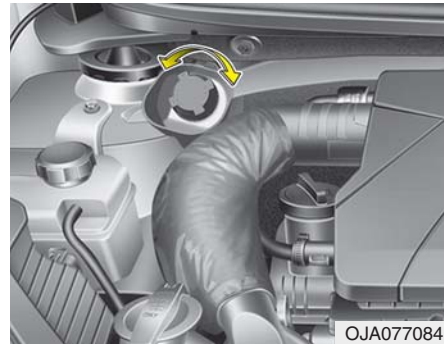
OJA077084

If your vehicle is FFV (Flex fuel vehicle), it needs to be checked and the reservoir should be filled in with the petrol for cold start when the outside temperature is low (below 20°C).

The nominal capacity of the petrol reservoir for cold start is 0.8 litres and the reservoir is located in the engine room.

Fill in the reservoir with petrol for cold start until it reaches the MAX line. If the petrol overflows, clean up the overflowed fuel with the towel.

⚠ WARNING - Refuelling

- **If pressurized fuel sprays out, it can cover your clothes or skin and thus subject you to the risk of fire and burns. Always remove the fuel cap carefully and slowly. If the cap is venting fuel or if you hear a hissing sound, wait until the condition stops before completely removing the cap.**
- **Do not "top off" after the nozzle automatically shuts off when refuelling.**
- **Always check that the fuel cap is installed securely to prevent fuel spillage in the event of an accident.**

⚠ WARNING - Refuelling dangers

Automotive fuels are flammable materials. When refuelling, please note the following guidelines carefully. Failure to follow these guidelines may result in severe personal injury, severe burns or death by fire or explosion.

- **Read and follow all warnings at the gas station facility.**
- **Before refuelling note the location of the Emergency Petrol Shut-Off, if available, at the gas station facility.**
- **Before touching the fuel nozzle, you should eliminate potentially dangerous static electricity discharge by touching another metal part of the vehicle, a safe distance away from the fuel filler neck, nozzle, or other gas source.**

(Continued)

(Continued)

- **Do not get back into a vehicle once you have begun refuelling since you can generate static electricity by touching, rubbing or sliding against any item or fabric (polyester, satin, nylon, etc.) capable of producing static electricity. Static electricity discharge can ignite fuel vapors resulting in rapid burning. If you must re-enter the vehicle, you should once again eliminate potentially dangerous static electricity discharge by touching a metal part of the vehicle, away from the fuel filler neck, nozzle or other petrol source.**
- **When using an approved portable fuel container, be sure to place the container on the ground prior to refuelling. Static electricity discharge from the container can ignite fuel vapors causing a fire.**

(Continued)

(Continued)

Once refuelling has begun, contact with the vehicle should be maintained until the filling is complete.

Use only approved portable plastic fuel containers designed to carry and store petrol.

- **Do not use mobile phones whilst refuelling. Electric current and/or electronic interference from mobile phones can potentially ignite fuel vapors causing a fire.**
- **When refuelling, always shut the engine off. Sparks produced by electrical components related to the engine can ignite fuel vapors causing a fire. Once refuelling is complete, check to make sure the filler cap and filler door are securely closed, before starting the engine.**

(Continued)

(Continued)

- **DO NOT use matches or a lighter and DO NOT SMOKE or leave a lit cigarette in your vehicle whilst at a gas station especially during refuelling. Automotive fuel is highly flammable and can, when ignited, result in fire.**
- **If a fire breaks out during refuelling, leave the vicinity of the vehicle, and immediately contact the manager of the gas station and then contact the local fire department. Follow any safety instructions they provide.**

⚠ CAUTION

- ***Make sure to refuel your vehicle according to the "Fuel requirements" suggested in section 1.***
- ***If the fuel filler cap requires replacement, please make sure that you use parts designed for replacement in your vehicle.***

  An incorrect fuel filler cap can result in a serious malfunction of the fuel system or emission control system. For more detailed information, Kia recommends to contact an authorised Kia dealer/service partner.
- ***Do not spill fuel on the exterior surfaces of the vehicle. Any type of fuel spilled on painted surfaces may damage the paint.***
- ***After refuelling, make sure the fuel cap is installed securely to prevent fuel spillage in the event of an accident.***

SUNROOF (IF EQUIPPED)


OJA046024

If your vehicle is equipped with a sunroof, you can slide or tilt your sunroof with the sunroof control lever located on the overhead console.

The sunroof can only be opened, closed, or tilted when the ignition switch is in the ON position or Engine Star/Stop button is in ON position.

✻ NOTICE

- **In cold and wet climates, the sunroof may not work properly due to freezing conditions.**
- **After a vehicle is washed or in a rainstorm be sure to wipe off any water that is on the sunroof before operating it.**

⚠ CAUTION

- ***Do not continue to move the sunroof control lever after the sunroof is fully opened, closed, or tilted. Damage to the motor or system components could occur.***
- ***Make sure the sunroof is closed fully when leaving your vehicle.***

  If the sunroof is open, rain or snow may leak through the sunroof and wet the interior as well as cause theft.

✻ NOTICE

The sunroof cannot slide when it is in the tilt position nor can it be tilted whilst in an open or slide position.

⚠ WARNING

Never adjust the sunroof or sunshade whilst driving. This could result in loss of control and an accident that may cause death, serious injury, or property damage.

⚠ WARNING

- **In order to prevent accidental operation of the sunroof, especially by a child, do not let a child operate the sunroof.**
- **Do not sit on the top of the vehicle. It may cause vehicle damage.**

Sliding the sunroof

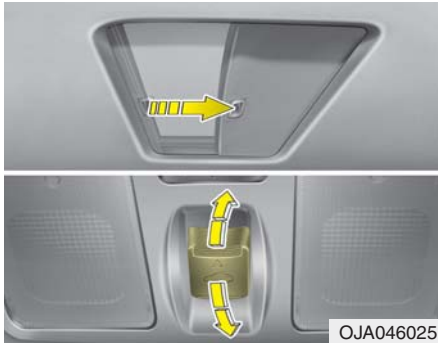
OJA046025

To open the sunroof, push the sunroof control lever backward.

To close the sunroof, push the sunroof control lever forward.

To open the sunroof automatically:

Pull the sunroof control lever backward fully and then release it. The sunroof will slide to the recommended open position (about 5 cm before the maximum slide open position).

To stop the sunroof sliding at any point, push the sunroof control lever momentarily.

To close the sunroof automatically:

Push the sunroof control lever forward fully and then release it. The sunroof will automatically close all the way.

To stop the sunroof sliding at any point, push the sunroof control lever momentarily.

✻ NOTICE

To reduce wind noise whilst driving, it is recommended that you drive with the sunroof slightly closed (stop the sunroof about 5cm(2in.) before the maximum slide open position).

⚠ WARNING

Make sure heads, other body parts or other objects are safely out of the way before closing the window to avoid injuries or vehicle damage.

Objects less than 4 mm (0.16 inch) in diameter caught between the sunroof glass and the front window channel may not be detected by the automatic reverse window and the window will not stop and reverse direction.

Automatic reversal


ORBC040096

If an object or part of the body is detected whilst the sunroof is closing automatically, it will reverse the direction, and then stop.

The auto reverse function does not work if a tiny obstacle is between the sliding glass and the sunroof sash. You should always check that all passengers and objects are away from the sunroof before closing it.

⚠ WARNING

- **Never try pinching any part of your body intentionally to activate the Automatic reversal function.**
- **The Automatic reversal function may not work if something gets caught just before the sunroof fully closes.**

Tilting the sunroof


OJA046026

To open the sunroof, push the sunroof control lever upward until the sunroof moves to the desired position.

To close the sunroof, push the sunroof lever forward until the sunroof moves to the desired position.

⚠ WARNING

- **Make sure heads, other body parts or other objects are safely out of the way before closing the sunroof to avoid injuries or vehicle damage.**
- **Never adjust the sunroof or sunshade whilst driving. This may cause loss of vehicle control resulting in an accident.**
- **To avoid serious injury or death, do not extend your head, arms or body outside the sunroof whilst driving.**

⚠ CAUTION

- ***Periodically remove any dirt that may accumulate on the guide rail.***
- ***If you try to open the sunroof when the temperature is below freezing or when the sunroof is covered with snow or ice, the glass or the motor could be damaged.***
- ***Whilst using sunroof for a long time, a dust between sunroof and roof panel can make a noise.***

  Open the sunroof and remove regularly the dust using clean cloth.
- ***The sunroof is made to slide together with sunshade. Do not leave the sunshade closed whilst the sunroof is open.***

Sunshade



The sunshade will be opened with the glass panel automatically when the glass panel is slid. You will have to close it manually if you want it closed.

Resetting the sunroof

Sunroof needs to be reset if (in the followings)

- Battery is discharged or disconnected or the related fuse has been replaced or disconnected.
- The one-touch sliding function of the sunroof does not normally operate.

1. The ignition switch must be in the ON position.
2. Close the sunroof completely.
3. Release the control lever.
4. Push the control lever forward until the sunroof tilts and slightly moves up and down. Then, release lever.
5. Push the control lever forward until the sunroof is operated as follows:

   TILT DOWN → SLIDE OPEN → SLIDE CLOSE

   Then, release the control lever.

If the sunroof does not operate properly after resetting, have the system checked by a professional workshop. Kia recommends to visit an authorised Kia dealer/service partner.

⚠ CAUTION

If the sunroof is not reset when the vehicle battery is disconnected or discharged, or related fuse is blown, the sunroof may operate improperly.

Sunroof open warning (if equipped)



OJA046160

If the driver removes the ignition key (smart key: turns off the engine) when the sunroof is not fully closed, the warning chime will sound for approximately 6 seconds and a message (for Type B cluster) will appear on the LCD display.

Close the sunroof securely when leaving your vehicle.

STEERING WHEEL

Electric power steering (If equipped)

Power steering uses the motor to assist you in steering the vehicle. If the engine is off or if the power steering system becomes inoperative, the vehicle may still be steered, but it will require increased steering effort.

The motor driven power steering is controlled by the power steering control unit which senses the steering wheel torque, steering wheel position and vehicle speed to command the motor.

The steering wheel becomes heavier as the vehicle's speed increases and becomes lighter as the vehicle's speed decreases for better control of the steering wheel.

Should you notice any change in the effort required to steer during normal vehicle operation, have the system checked by a professional workshop. Kia recommends to visit an authorised Kia dealer/service partner.

✻ NOTICE

The following symptoms may occur during normal vehicle operation:

- **The EPS warning light does not illuminate.**
- **The steering effort is high immediately after turning the ignition switch on. This happens as the system performs the EPS system diagnostics. When the diagnostics is completed, the steering wheel will return to its normal condition.**
- **A click noise may be heard from the EPS relay after the ignition switch is turned to the ON or LOCK position.**
- **Motor noise may be heard when the vehicle is at a stop or at a low driving speed.**
- **If the Electric Power Steering System does not operate normally, the warning light will illuminate on the instrument cluster. The steering wheel may become difficult to control or operate abnormally. Kia recommends to visit an authorised Kia dealer/service partner.**

(Continued)

(Continued)

- **The steering effort increases if the steering wheel is rotated continuously when the vehicle is not in motion. However, after a few minutes, it will return to its normal conditions.**
- **When you operate the steering wheel in low temperature, abnormal noise could occur. If temperature rises, the noise will disappear. This is a normal condition.**
- **When the charging system warning light comes on or the voltage is low (When the alternator (or battery) does not operate normally or it malfunctions), the steering wheel may get heavy and become difficult to control operate abnormally.**

Tilt steering (If equipped)

A tilt steering wheel allows you to adjust the steering wheel before you drive.

You can also raise it to give your legs more room when you exit and enter the vehicle.

The steering wheel should be positioned so that it is comfortable for you to drive, whilst permitting you to see the instrument panel warning lights and gauges.

⚠ WARNING

- **Never adjust the angle of the steering wheel whilst driving. You may lose steering control and cause severe personal injury, death or accidents.**
- **After adjusting, push the steering wheel both up and down to be certain it is locked in position.**

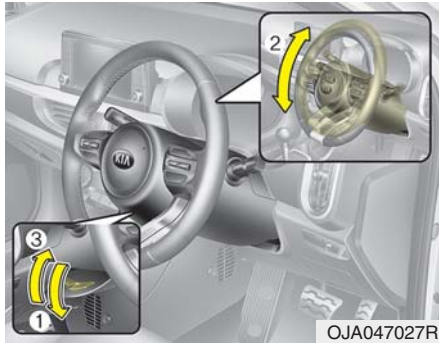

To change the steering wheel angle, pull down the lock release lever (1), adjust the steering wheel to the desired angle (2), then pull up the lock-release lever to lock the steering wheel in place(3). Be sure to adjust the steering wheel to the desired position before driving.

Heated steering wheel (if equipped)

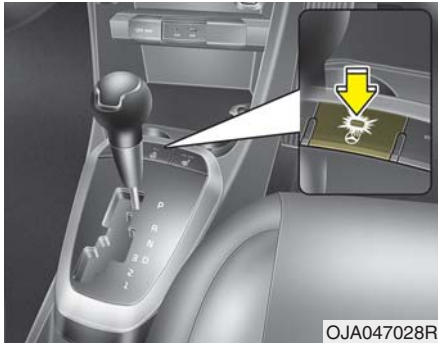

When the ignition switch is in the ON position, pressing the heated steering wheel button warms the steering wheel. The indicator on the button will illuminate.

To turn the steering wheel off, press the button once again. The indicator on the button will turn off.

It will turn off automatically approximately 30 minutes after the heated steering wheel is turned on.

If you turn off the ignition within 30 minutes after pressing the steering wheel heater button, from next ignition ON, the heater will be OFF.

⚠ CAUTION

- ***Do not install any grip to operate the steering wheel. This causes damage to the heated steering wheel system.***
- ***When cleaning the heated steering wheel, do not use an organic solvent such as paint thinner, benzene, alcohol and petrol. Doing so may damage the surface of the steering wheel.***
- ***If the surface of steering wheel is damaged by sharp object, damage to the heated steering wheel components could occur.***

Horn



OYB046031

To sound the horn, press the horn symbols on your steering wheel. Check the horn regularly to be sure it operates properly.

✻ NOTICE

To sound the horn, press the area indicated by the horn symbol on your steering wheel (see illustration). The horn will operate only when this area is pressed.

⚠ CAUTION

Do not strike the horn severely to operate it, or hit it with your fist. Do not press on the horn with a sharp-pointed object.

MIRRORS

Inside rearview mirror

Adjust the rearview mirror to centre on the view through the rear window. Make this adjustment before you start driving.

⚠ WARNING - Rear visibility

Do not place objects in the rear seat or cargo area which would interfere with your vision through the rear window.

⚠ WARNING

Do not adjust the rearview mirror whilst the vehicle is moving. This could result in loss of control, and an accident which could cause death, serious injury or property damage.

⚠ WARNING

Do not modify the inside mirror and do not install a wide mirror. It could result in injury, during an accident or deployment of the air bag.

Day/night rearview mirror

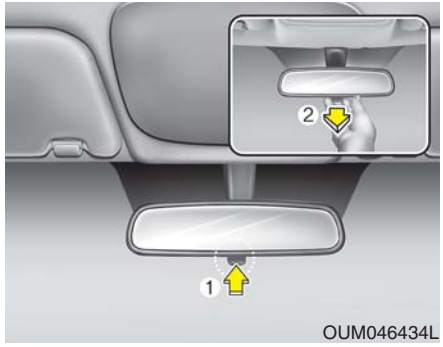

Make this adjustment before you start driving and whilst the day/night lever is in the day position (1).

Pull the day/night lever toward you (2) to reduce the glare from the headlights of the vehicles behind you during night driving.

Remember that you lose some rearview clarity in the night position.

❈ (1) : Day, (2) : Night

Outside rearview mirror

Be sure to adjust mirror angles before driving.

Your vehicle is equipped with both left-hand and right-hand outside rearview mirrors. The mirrors can be adjusted remotely with the remote switch. The mirror heads can be folded back to prevent damage during an automatic car wash or when passing in a narrow street.

⚠ WARNING - Rearview mirrors

- **The outside rearview mirror is convex. Objects seen in the mirror are closer than they appear.**
- **Use your interior rearview mirror or direct observation to determine the actual distance of following vehicles when changing lanes.**

⚠ CAUTION

Do not scrape ice off the mirror face; this may damage the surface of the glass. If ice should restrict movement of the mirror, do not force the mirror for adjustment. To remove ice, use a deicer spray, or a sponge or soft cloth with very warm water.

⚠ CAUTION

If the mirror is jammed with ice, do not adjust the mirror by force. Use an approved spray de-icer (not radiator antifreeze) to release the frozen mechanism or move the vehicle to a warm place and allow the ice to melt.

⚠ WARNING

Do not adjust or fold the outside rearview mirrors whilst the vehicle is moving. This could result in loss of control, and an accident which could cause death, serious injury or property damage.

Remote control

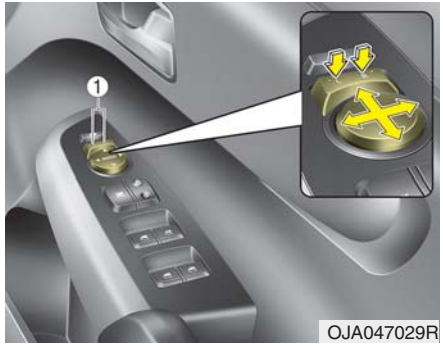

Electric type

The electric remote control mirror switch allows you to adjust the position of the left and right outside rearview mirrors. To adjust the position of either mirror, the ignition switch should be in the ACC position.

To adjust the position of either mirror, press the R or L button (1) to select the right side mirror or the left side mirror, then press a corresponding point (▲) on the mirror adjustment control to position the selected mirror up, down, left or right.

After adjustment, press the R or L button again to prevent the inadver tent adjustment.

⚠ CAUTION

- ***The mirrors stop moving when they reach the maximum adjusting angles, but the motor continues to operate whilst the switch is pressed. Do not press the switch longer than necessary, the motor may be damaged.***
- ***Do not attempt to adjust the outside rearview mirror by hand. Doing so may damage the parts.***

Folding the outside rearview mirror

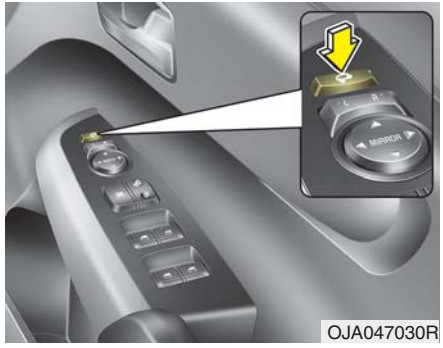

Electric Type (if equipped)

To fold the outside rearview mirror, depress the button.

To unfold it, depress the button again.

⚠ CAUTION

The electric type outside rearview mirror operates even though the ignition switch or Engine Star/Stop button is in the OFF position. However, to prevent unnecessary battery discharge, do not adjust the mirrors longer than necessary whilst the engine is not running.

⚠ CAUTION

In case it is an electric type outside rearview mirror, don't fold it by hand. It could cause motor failure.

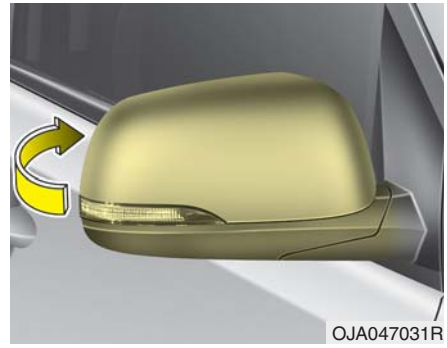

Manual type

To fold outside rearview mirror, grasp the housing of mirror and then fold it toward the rear of the vehicle.

INSTRUMENT CLUSTER

■ **Type A**



■ **Type B**



1. Tachometer
2. Speedometer
3. Engine coolant temperature gauge
4. Fuel gauge
5. Warning and indicator lights
6. LCD display

❈ The actual cluster in the vehicle may differ from the illustration.
For more details, refer to the “Gauges” in this chapter.

OJA048100/OJA048101

Instrument Cluster Control

Adjusting Instrument Cluster Illumination (if equipped)



OJA046032

⚠ WARNING

Never adjust the instrument cluster whilst driving. This could result in loss of control and lead to an accident that may cause death, serious injury, or property damage.

The brightness of the instrument panel illumination is changed by rotating the illumination control knob (“+” or “-”) when the ignition switch or Engine Start/Stop button is ON, or the tail lights are turned on.



OJA046111

The brightness of the instrument panel illumination is displayed (Type B Cluster). If the brightness reaches to the maxi mum or minimum level, an alarm will sound (if equipped).

LCD Window Control



OJA046033

The LCD Window modes can be changed by using the control buttons on the steering wheel.

- Type A

(1) TRIP : TRIP button for changing modes.

(2) RESET : RESET button for resetting the selected item.

- Type B

(1) : MODE button for change the LCD MODES

(2) ∧/∨ : MOVE scroll switch for select the items

(3) OK : SET/RESET button for set the items or reset the items

❈ For the LCD modes, refer to “LCD Window” in this chapter.

Gauges

Speedometer

■ Type A (km/h)



OYB046104

■ Type B (MPH, km/h)



OYB046105

The speedometer indicates the speed of the vehicle and is calibrated in miles per hour (mph) and/or kilometers per hour (km/h).

Tachometer



OYB046106

The tachometer indicates the approximate number of engine revolutions per minute (rpm).

Use the tachometer to select the correct shift points and to prevent lugging and/or over-revving the engine.

⚠ CAUTION

Do not operate the engine within the tachometer's RED ZONE. This may cause severe engine damage.

Engine Coolant Temperature Gauge

■ Type A (for Except Europe)



OYB046110

■ Type B (for Europe)



OYB046111

This gauge indicates the temperature of the engine coolant when the ignition switch or Engine Start/Stop button is ON.

⚠ CAUTION

If the gauge pointer moves beyond the normal range area toward the "130 or H" position, it indicates overheating that may damage the engine.

Do not continue driving with an overheated engine. If your vehicle overheats, refer to "If the Engine Overheats" in chapter 7.

⚠ WARNING

Never remove the radiator cap when the engine is hot. The engine coolant is under pressure and could severely burn. Wait until the engine is cool before adding coolant to the reservoir.

Fuel Gauge

■ Type A (for Except Europe)



OYB046108

■ Type B (for Europe)



OYB046109

This gauge indicates the approximate amount of fuel remaining in the fuel tank.

✻ NOTICE

- **The fuel tank capacity is given in chapter 9.**
- **The fuel gauge is supplemented by a low fuel warning light, which will illuminate when the fuel tank is nearly empty.**
- **On inclines or curves, the fuel gauge pointer may fluctuate or the low fuel warning light may come on earlier than usual due to the movement of fuel in the tank.**

⚠ WARNING - Fuel Gauge

Running out of fuel can expose vehicle occupants to danger.

You must stop and obtain additional fuel as soon as possible after the warning light comes on or when the gauge indicator comes close to the "0 or E (Empty)" level.

⚠ CAUTION

Avoid driving with a extremely low fuel level. Running out of fuel could cause the engine to misfire damaging the catalytic converter.

Odometer



OJA046133

The odometer Indicates the total distance that the vehicle has been driven and should be used to determine when periodic maintenance should be performed.

- Odometer range : 0 ~ 1,599,999 km or 999,999 miles.

Outside Temperature Gauge

■ Type A



OJA046134

■ Type B



OJA046135

This gauge indicates the current outside air temperatures by 1°C (1°F).

- Temperature range :
- 40°C ~ 60°C (- 40°F ~ 140°F)

The outside temperature on the display may not change immediately like a general thermometer to prevent the driver from being inattentive.

To change the temperature unit (from °C to °F or from °F to °C)

• Type A Cluster

Change the trip modes to Distance To Empty mode and then press and hold the RESET button for 5 seconds and more.

• Type B Cluster

The temperature unit can be changed by using the “User Settings” mode of the LCD Windows.

❊ For more details, refer to “LCD Windows” in this chapter.

Transaxle Shift Indicator

Manual Transaxle Shift Indicator (if equipped)

■ Type A



OJA046138

■ Type B



OJA046142

This indicator informs which gear is desired whilst driving to save fuel.

- Shifting up : ▲2, ▲3, ▲4, ▲5

For example

▲3 : Indicates that shifting up to the 3rd gear is desired (currently the shift lever is in the 2nd or 1st gear).

When the system is not working properly, the indicator is not displayed.

LCD WINDOWS (IF EQUIPPED)

Over view

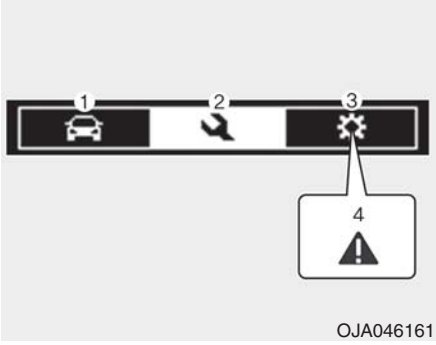

LCD windows show the following various information to drivers.

- Trip information
- LCD modes
- Warning messages

Trip information (Trip computer)

The trip computer is a microcomputer-controlled driver information system that displays information related to driving.

✻ NOTICE

Some driving information stored in the trip computer (for example Average Vehicle Speed) resets if the battery is disconnected.

Trip Modes

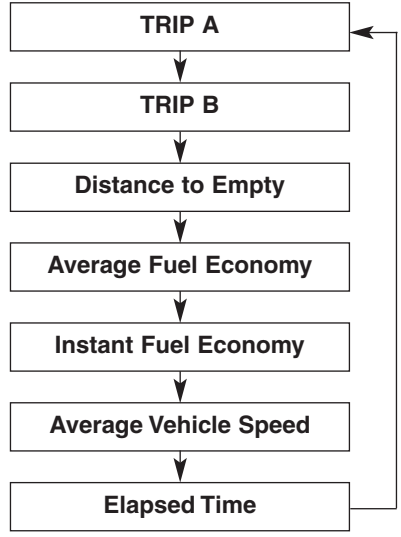

To change the trip mode, scroll the MOVE scroll switch (∧/∨) or TRIP button in the trip computer mode.

Trip A/B

■ Type A

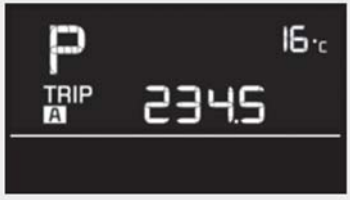

OJA046114

■ Type B

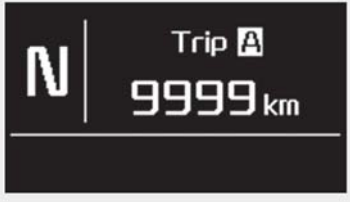

OJA046113

Tripmeter

- The tripmeter is the total driving distance since the last tripmeter reset.
  - Distance range : 0 ~ 9999.9 km (mi)
- To reset the tripmeter, press the RESET button or OK button on the steering wheel for more than 1 second when the tripmeter is displayed.

■ Type A



OJA046115

■ Type B

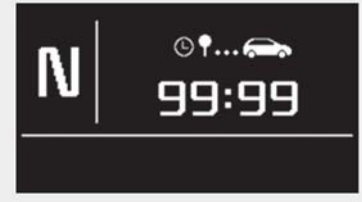

OJA046116

Elapsed Time

- The elapsed time is the total driving time since the last elapsed time reset.
  - Time range (hh:mm) : 00:00 ~ 99:59

- To reset the elapsed time, press the RESET button or OK button on the steering wheel for more than 1 second when the elapsed time is displayed.

✻ NOTICE

Even if the vehicle is not in motion, the elapsed time keeps going whilst the engine is running.

■ Type A



OJA046117

■ Type B



OJA046118

Average Vehicle Speed

- The average vehicle speed is calculated by the total driving distance and driving time since the last average vehicle speed reset.
  - Speed range : 0 ~ 999 km/h or mph
- To reset the average vehicle speed, press the RESET button or OK button on the steering wheel for more than 1 second when the average vehicle speed is displayed.

✻ NOTICE

- **The average vehicle speed is not displayed if the driving distance is less than 300 meters or the driving time is less than 10 seconds since the ignition switch is turned to ON.**
- **Even if the vehicle is not in motion, the average vehicle speed keeps going whilst the engine is running.**

Fuel Economy

■ Type A



OJA046123

■ Type B



OJA046124

Distance To Empty

- The distance to empty is the estimated distance the vehicle can be driven with the remaining fuel.
  - Distance range: 1~9,999 km or 1~9,999 mi.
- If the estimated distance is below 1 km (1 mi.), the trip computer will display "---" as distance to empty.

✻ NOTICE

- **If the vehicle is not on level ground or the battery power has been interrupted, the distance to empty function may not operate correctly.**
- **The distance to empty may differ from the actual driving distance as it is an estimate of the available driving distance.**
- **The trip computer may not register additional fuel if less than 6 liters (1.6 gallons) of fuel are added to the vehicle.**
- **The fuel economy and distance to empty may vary significantly based on driving conditions, driving habits, and condition of the vehicle.**

■ Type A



OJA046121

■ Type B



OJA046122

Average Fuel Economy

- The average fuel economy is calculated by the total driving distance and fuel consumption since the last average fuel economy reset.
  - Fuel economy range:
    0 ~ 99.9km/L, L/100 km or MPG

- The average fuel economy can be reset both manually and automatically.

Manual reset

To clear the average fuel economy manually, press the RESET button or OK button on the steering wheel for more than 1 second when the average fuel economy is displayed.

Automatic reset (for type B cluster)

To make the average fuel economy be reset automatically whenever refuelling, select the “Fuel economy auto reset” mode in User Setting menu of the LCD Windows (Refer to “LCD Windows”).

- OFF - You may set to default manually by using the trip switch reset button.
- When driving - The vehicle will automatically set to default once 4 hours pass after the Ignition is in OFF.
- When refuelling - After refuelling more than 6 liters and driving over 1km/h, the vehicle will reset to default automatically.

✻ NOTICE

The average fuel economy is not displayed for more accurate calculation if the vehicle does not drive more than 10 seconds or 50 meters (0.03 miles) since the ignition switch or Engine Start/Stop button is turned to ON.

■ Type A



OJA046119

■ Type B

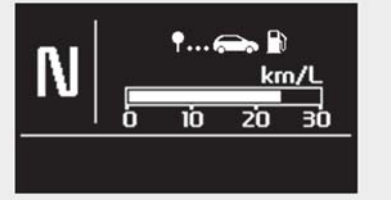

OJA046120

Instant Fuel Economy

- This mode displays the instant fuel economy during the last few seconds when the vehicle speed is more than 10 km/h (6.2 MPH).
- For Type A cluster : 0 ~ 99.9 km/L, L/100 km, MPG

- For Type B cluster : 0 ~ 30 km/L, L/100km, 0 ~ 50 MPG

LCD Modes (for type B cluster)

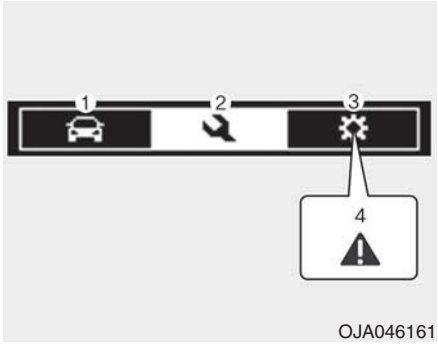

(1) Trip Computer mode

This mode displays driving information like the tripmeter, fuel economy, and so on.

For more details, refer to “Trip Computer” in this chapter.

(2) Service mode

This mode informs of service interval (mileage or days) and pressure status of each tyre.

(3) User Setting mode

On this mode, you can change settings of the doors, lamps and so on.

(4) Master warning mode

This mode informs of warning messages related to TPMS fail, low pressure (if equipped) or Low engine oil (if equipped) or Autonomous Emergency Braking system (if equipped) failure.

❈ For controlling the LCD modes, refer to “LCD window Control” in this chapter.

Service Mode

Service in

It calculates and displays when you need a scheduled maintenance service (mileage or days).

If the remaining mileage or time reaches 1,500 km (900 mi.) or 30 days, “Service in” message is displayed for several seconds each time you set the ignition switch or Engine Start/Stop Button to the ON position.

✻ NOTICE

If any of the following conditions occurs, the mileage and days may be incorrect.

- **The battery cable is disconnected.**
- **The fuse switch is turned off.**
- **The battery is discharged.**

User Settings Mode (for type B cluster)

On this mode, you can change setting of the doors, lamps, and so on.

⚠ WARNING

Do not adjust the User Setting whilst driving. You may lose your steering control and cause severe personal injury or accidents.

Edit settings after shifting to P/Edit settings after engaging parking brake

This warning message appears if you try to adjust the User Settings whilst driving.

- Automatic transaxle

For your safety, change the User Settings after parking the vehicle, applying the parking brake and moving the shift lever to P (Park).

- Manual transaxle

For your safety, change the User Settings after engaging the parking brake.

FCW (Forward Collision Warning) (if equipped)

- **Autonomous Emergency Braking (if equipped)** : If this item is checked, the AEB function will be activated.

✻For more details, refer to “Radar type Autonomous Emergency Braking (AEB)” in chapter 6.

Door

- **Automatically Lock**

- Disable : The auto door lock operation will be deactivated.
- Enable on Speed : All doors will be automatically locked when the vehicle speed exceeds 15km/h (9.3mph).

- **Automatically Unlock**

- Disable : The auto door unlock operation will be canceled.
- Vehicle Off : All doors will be automatically unlocked when the ignition key is removed from the ignition switch or the Engine Star/Stop button is set to the OFF position.

Lights

- **One Touch Turn Signal**

- Off : The one touch turn signal function will be deactivated.
- 3, 5, 7 Flashes : The lane change signals will blink 3, 5, or 7 times when the turn signal lever is moved slightly.

❈For more details, refer to “Light” in this chapter

- **Head Lamp Delay**

- If this item checked, the head lamp delay function will be activated.

Service interval (if equipped)

On this mode, you can activate the service interval function with mileage (km or mi.) and period (months).

- **Off** : The service interval function will be deactivated.
- **On** :You can set the service interval (mileage and months).

❈For more details, refer to “Service Mode” in this chapter.

✻ NOTICE

If it is not available to set service interval on your vehicle, have the system serviced by a professional workshop. Kia recommends to visit an authorised Kia dealer/service partner.

Other Features

- **Fuel Economy Auto Reset**

- Off : The average fuel economy will not reset automatically whenever refuelling.
- After Ignition : The average fuel economy will reset automatically whenever it has passed 4 hours after turning OFF the engine.
- After Refuelling : The average fuel economy will reset automatically when refuelling.

- **Fuel Economy Unit**

  To select the fuel economy unit.

  (km/L ↔ L/100km,UK gallon ↔ US gallon)

- **Temperature Unit**

  To select the temperature unit. (°C,°F)

Language

Choose the language.

Reset

You can reset the menus in the User Settings Mode. All menus in the User Settings Mode are initialized, except language and service interval.

Warning messages

Warning messages appear on the LCD to warn the driver. It is located in the centre of the instrument cluster.

The warning message may appear differently depending on the type of instrument cluster and some may not show the warning message at all.

The warning message is shown in either symbol, symbol and text, or text type only.

■ Door,Tailgate



OJA046149K

■ Bonnet



OJA046159

Door, bonnet, tailgate open (if equipped)

- This warning is displayed indicating which door, or the bonnet, or the tailgate is open.



OJA046160

Sunroof open (if equipped)

- This warning is displayed if you turn off the engine when the sunroof is open.

Shift to P (for smart key system and automatic transaxle) (if equipped)

- This warning message illuminates if you try to turn off the engine without the shift lever in P (Park) position.
- At this time, the Engine Start/Stop Button turns to the ACC position (If you press the Engine Start/Stop Button once more, it will turn to the ON position).

Low Key Battery (for smart key system) (if equipped)

- This warning message illuminates if the battery of the smart key is discharged when the Engine Start/Stop Button changes to the OFF position.

Press START button whilst turning wheel (for smart key system) (if equipped)

- This warning message illuminates if the steering wheel does not unlock normally when the Engine Start/Stop Button is pressed.
- It means that you should press the Engine Start/Stop Button whilst turning the steering wheel right and left.

Steering wheel unlocked (for smart key system) (if equipped)

- This warning message illuminates if the steering wheel does not lock when the Engine Start/Stop Button changes to the OFF position.

Check Steering Wheel Lock System (for smart key system) (if equipped)

- This warning message illuminates if the steering wheel does not lock normally when the Engine Start/Stop Button changes to the OFF position.

Press brake pedal to start engine (for smart key system and automatic transaxle) (if equipped)

- This warning message illuminates if the Engine Start/Stop Button changes to the ACC position twice by pressing the button repeatedly without depressing the brake pedal.
- It means that you should depress the brake pedal to start the engine.

Press clutch pedal to start engine (for smart key system and manual transaxle) (if equipped)

- This warning message illuminates if the Engine Start/Stop Button changes to the ACC position twice by pressing the button repeatedly without depressing the clutch pedal.
- It means that you should depress the clutch pedal to start the engine.

Key not in vehicle (for smart key system) (if equipped)

- This warning message illuminates on the cluster if you open or close the door when the Engine Start/Stop button is in the ACC or ON position and the smart key is not in the vehicle. Especially when you close the door, a warning alarm will also sound for approximately 5 seconds.
- It means that you should always have the smart key with you.

Key not detected (for smart key system) (if equipped)

- This warning message illuminates for 10 seconds on the cluster if you don't have the smart key with you or it is not detected when you press the Engine Start/Stop button. In this case, the immobiliser indicator light will blink for 10 seconds.

Press START button again (for smart key system) (if equipped)

- This warning message illuminates if you can not operate the Engine Start/Stop Button when there is a problem with the Engine Start/Stop Button system.
- It means that you could start the engine by pressing the Engine Start/ Stop Button once more.
- If the warning illuminates each time you press the Engine Start/Stop Button, have the vehicle inspected by a professional workshop. Kia recommends to visit an authorised Kia dealer/service partner.

Press START button with key (for smart key system) (if equipped)

- This warning message illuminates if you press the Engine Start/Stop Button whilst the warning message "Key not detected" is illuminating.
- At this time, the immobiliser indicator light blinks.

Check BRAKE SWITCH fuse (for smart key system and automatic transaxle) (if equipped)

- This warning message illuminates if the brake switch fuse is disconnected.
- It means that you should replace the fuse with a new one. If that is not possible, you can start the engine by pressing the Engine Start/Stop Button for 10 seconds in the ACC position.

Shift to P or N to start engine (for smart key system and automatic transaxle) (if equipped)

- This warning message illuminates if you try to start the engine with the shift lever not in the P (Park) or N (Neutral) position.

✻ NOTICE

You can start the engine with the shift lever in the N (Neutral) position. But, for your safety, we recommend that you start the engine with the shift lever in the P (Park) position.

Icy Road Warning Light (if equipped)

■ Type A



OJA046131

■ Type B



OJA046132

This warning light is to warn the driver the road may be icy.

When the following conditions occur, the warning light (including Outside Temperature Gauge) blinks 5 times and then illuminates, and also warning chime sounds once.

- The temperature on the Outside Temperature Gauge is below approximately 4°C (40°F).

✻ NOTICE

If the icy road warning light appears whilst driving, you should drive more attentively and safely refraining from over-speeding, rapid acceleration, sudden braking or sharp turning, etc.

WARNING AND INDICATOR LIGHTS

Warning lights

✻ NOTICE - Warning lights

Make sure that all warning lights are OFF after starting the engine. If any light is still ON, this indicates a situation that needs attention.

Air bag Warning Light



This warning light illuminates:

- Once you set the ignition switch or Engine Start/Stop Button to the ON position.
  - It illuminates for approximately 6 seconds and then goes off.
- When there is a malfunction with the SRS.

  In this case, have the vehicle inspected by a professional workshop. Kia recommends to visit an authorised Kia dealer/service partner.

Seat Belt Warning Light



This warning light informs the driver that the seat belt is not fastened.

❈ For more details, refer to the “Seat Belts” in chapter 3.

Parking Brake & Brake Fluid Warning Light



This warning light illuminates:

- Once you set the ignition switch or Engine Start/Stop Button to the ON position.
  - It illuminates for approximately 3 seconds
  - It remains on if the parking brake is applied.
- When the parking brake is applied.
- When the brake fluid level in the reservoir is low.
  - If the warning light illuminates with the parking brake released, it indicates the brake fluid level in reservoir is low.

If the brake fluid level in the reservoir is low:

1. Drive carefully to the nearest safe location and stop your vehicle.
2. With the engine stopped, check the brake fluid level immediately and add fluid as required (For more details, refer to “Brake Fluid” in chapter 8). Then check all brake components for fluid leaks. If any leak on the brake system is still found, the warning light remains on, or the brakes do not operate properly, do not drive the vehicle.

In this case, have the vehicle towed to a professional workshop and inspected. Kia recommends to visit an authorised Kia dealer/service partner.

Dual-diagonal braking system

Your vehicle is equipped with dual-diagonal braking systems. This means you still have braking on two wheels even if one of the dual systems should fail.

With only one of the dual systems working, more than normal pedal travel and greater pedal pressure are required to stop the vehicle.

Also, the vehicle will not stop in as short a distance with only a portion of the brake system working.

If the brakes fail whilst you are driving, shift to a lower gear for additional engine braking and stop the vehicle as soon as it is safe to do so.

⚠ WARNING - Parking Brake & Brake Fluid Warning Light

Driving the vehicle with a warning light ON is dangerous. If the Parking Brake & Brake Fluid Warning Light illuminates with the parking brake released, it indicates that the brake fluid level is low.

In this case, have the vehicle inspected by a professional workshop. Kia recommends to visit an authorised Kia dealer/service partner.

Anti-lock Brake System (ABS) Warning Light



This warning light illuminates:

- Once you set the ignition switch or Engine Start/Stop Button to the ON position.
  - It illuminates for approximately 3 seconds and then goes off.
- When there is a malfunction with the ABS (The normal braking system will still be operational without the assistance of the anti-lock brake system).

  In this case, have the vehicle inspected by a professional workshop. Kia recommends to visit an authorised Kia dealer/service partner.

Electronic Brake force Distribution (EBD) System Warning Light



These two warning lights illuminate at the same time whilst driving:

- When the ABS and regular brake system may not work normally.

  In this case, have the vehicle inspected by a professional workshop. Kia recommends to visit an authorised Kia dealer/service partner.

⚠ WARNING - Electronic Brake force Distribution (EBD) System Warning Light

When both ABS and Parking Brake & Brake Fluid Warning Lights are on, the brake system will not work normally and you may experience an unexpected and dangerous situation during sudden braking.

In this case, avoid high speed driving and abrupt braking.

Have the vehicle inspected by a professional workshop as soon as possible. Kia recommends to visit an authorised Kia dealer/service partner.

✻ NOTICE - Electronic Brake force Distribution (EBD) System Warning Light

When the ABS Warning Light is on or both ABS and Parking Brake & Brake Fluid Warning Lights are on, the speedometer, odometer, or trip-meter may not work. Also, the EPS Warning Light may illuminate and the steering effort may increase or decrease.
In this case, have the vehicle inspected by a professional workshop as soon as possible.
Kia recommends to visit an authorised Kia dealer/service partner.

Electronic Power Steering (EPS) Warning Light (if equipped)



This warning light illuminates:

- Once you set the ignition switch or Engine Start/Stop Button to the ON position.
  - This indicator light comes on after the ignition key is turned to the ON position and then goes out after approximately 3 seconds.
- When there is a malfunction with the EPS.

  In this case, have the vehicle inspected by a professional workshop. Kia recommends to visit an authorised Kia dealer/service partner.

Malfunction Indicator Lamp (MIL)



This warning light illuminates:

- Once you set the ignition switch or Engine Start/Stop Button to the ON position.
  - It remains on until the engine is started.
- When there is a malfunction with the emission control system.

  In this case, have the vehicle inspected by a professional workshop. Kia recommends to visit an authorised Kia dealer/service partner.

⚠ CAUTION - Malfunction Indicator Lamp (MIL)

Driving with the Malfunction Indicator Lamp (MIL) on may cause damage to the emission control systems which could effect drivability and/or fuel economy.

⚠ CAUTION - Petrol Engine

If the Malfunction Indicator Lamp (MIL) illuminates, potential catalytic converter damage is possible which could result in loss of engine power.

In this case, have the vehicle inspected by a professional workshop as soon as possible. Kia recommends to visit an authorised Kia dealer/service partner.

⚠ CAUTION - Diesel Engine

If the Malfunction Indicator Lamp (MIL) blinks, some error related to the injection quantity adjustment occurs which could result in loss of engine power, combustion noise and poor emission.

In this case, have the engine control system inspected by a professional workshop. Kia recommends to visit an authorised Kia dealer/service partner.

Charging System Warning Light



This warning light illuminates:

- Once you set the ignition switch or Engine Start/Stop Button to the ON position.
  - It remains on until the engine is started.
- When there is a malfunction with either the alternator or electrical charging system.

If there is a malfunction with either the alternator or electrical charging system:

1. Drive carefully to the nearest safe location and stop your vehicle.
2. Turn the engine off and check the alternator drive belt for looseness or breakage.

   If the belt is adjusted properly, there may be a problem in the electrical charging system.

   In this case, have the vehicle inspected by a professional workshop as soon as possible. Kia recommends to visit an authorised Kia dealer/service partner.

Engine Oil Pressure Warning Light



This warning light illuminates:

- Once you set the ignition switch or Engine Start/Stop Button to the ON position.
  - It remains on until the engine is started.
- When the engine oil pressure is low.

If the engine oil pressure is low:

1. Drive carefully to the nearest safe location and stop your vehicle.
2. Turn the engine off and check the engine oil level (For more details, refer to “Engine Oil” in chapter 8). If the level is low, add oil as required.

   If the warning light remains on after adding oil or if oil is not available, have the vehicle inspected by a professional workshop as soon as possible. Kia recommends to visit an authorised Kia dealer/service partner.

⚠ CAUTION - Engine Oil Pressure Warning Light

- ***If the engine does not stop immediately after the Engine Oil Pressure Warning Light is illuminated, severe damage could result.***
- ***If the warning light stays on whilst the engine is running, it indicates that there may be serious engine damage or malfunction. In this case,***
  1. ***Stop the vehicle as soon as it is safe to do so.***
  2. ***Turn off the engine and check the oil level. If the oil level is low, fill the engine oil to the proper level.***
  3. ***Start the engine again. If the warning light stays on after the engine is started, turn the engine off immediately. In this case, have the vehicle inspected by a professional workshop. Kia recommends to visit an authorised Kia dealer/service partner.***

Low Fuel Level Warning Light



This warning light illuminates:

When the fuel tank is nearly empty.

If the fuel tank is nearly empty:

Add fuel as soon as possible.

⚠ CAUTION - Low Fuel Level

Driving with the Low Fuel Level warning light on or with the fuel level below “0 or E” can cause the engine to misfire and damage the catalytic converter (if equipped).

Low Tyre Pressure Warning Light (if equipped)



This warning light illuminates:

- Once you set the ignition switch or Engine Start/Stop Button to the ON position.
  - It illuminates for approximately 3 seconds and then goes off.
- When one or more of your tires are significantly underinflated (The location of the underinflated tires are displayed on the LCD display).

❈ For more details, refer to “Tyre Pressure Monitoring System (TPMS)” in chapter 7.

This warning light remains on after blinking for approximately 60 seconds or repeats blinking and off at the intervals of approximately 3 seconds:

- When there is a malfunction with the TPMS.

  In this case, have the vehicle inspected by a professional workshop as soon as possible. Kia recommends to visit an authorised Kia dealer/service partner.

❈For more details, refer to “Tyre Pressure Monitoring System (TPMS)” in chapter 7.

⚠ WARNING - Safe Stopping

- **The TPMS cannot alert you to severe and sudden tyre damage caused by external factors.**
- **If you notice any vehicle instability, immediately take your foot off the accelerator pedal, apply the brakes gradually with light force, and slowly move to a safe position off the road.**

Autonomous Emergency Braking (AEB) Warning light (if equipped)



This indicator light illuminates:

- When there is a malfunction with the AEB.

In this case, have the vehicle inspected by a professional workshop. Kia recommends to visit an authorised Kia dealer/service partner.

Overspeed Warning Light (if equipped)



This warning light blinks:

- When you drive the vehicle more than 120 km/h.
  - This is to prevent you from driving your vehicle with overspeed.
  - The overspeed warning chime also sound for approximately 5 seconds.

Master Warning Light



This indicator light illuminates:

- This warning light informs the driver the following situations
  - TPMS failure, low pressure (if equipped)
  - Low engine oil (if equipped)
  - Autonomous Emergency Braking system (if equipped) failure

If the warning situation is solved, the master warning light will turn off.

Door Ajar Warning Light (if equipped)



This warning light illuminates:

When a door is not closed securely.

Tailgate Open Warning Light (if equipped)



This warning light illuminates:

When the tailgate is not closed securely.

Indicator Lights

Electronic Stability Control (ESC) Indicator Light (if equipped)



This indicator light illuminates:

- Once you set the ignition switch or Engine Start/Stop Button to the ON position.
  - It illuminates for approximately 3 seconds and then goes off.
- When there is a malfunction with the ESC system.

  In this case, have the vehicle inspected by a professional workshop. Kia recommends to visit an authorised Kia dealer/service partner.

This indicator light blinks:

Whilst the ESC is operating.

❈For more details, refer to “Electronic Stability Control (ESC)” in chapter 6.

Electronic Stability Control (ESC) OFF Indicator Light (if equipped)



This indicator light illuminates:

- Once you set the ignition switch or Engine Start/Stop Button to the ON position.
  - It illuminates for approximately 3 seconds and then goes off.
- When you deactivate the ESC system by pressing the ESC OFF button.

❈For more details, refer to “Electronic Stability Control (ESC)” in chapter 6.

Auto stop indicator (if equipped)



This indicator will illuminate when the engine enters the Idle Stop mode of the ISG (Idle Stop and Go) system.

When the automatic starting occurs, the auto stop indicator on the cluster will blink for 5 seconds.

❈For more details, refer to the ISG (Idle Stop and Go) system in chapter 6.

✻ NOTICE

When the engine automatically starts by the ISG system, some warning lights (ABS, ESC, ESC OFF, EPS or Parking brake warning light) may turn on for a few seconds.
This happens because of the low battery voltage. It does not mean the system is malfunctioning.

Immobiliser Indicator Light (Without Smart Key)



This indicator light illuminates:

- When the vehicle detects the immobiliser in your key properly whilst the ignition switch is ON.
  - At this time, you can start the engine.
  - The indicator light goes off after starting the engine.

This indicator light blinks:

- When there is a malfunction with the immobiliser system.

  In this case, have the vehicle inspected by a professional workshop. Kia recommends to visit an authorised Kia dealer/service partner.

Immobiliser Indicator Light (With Smart Key)



This indicator light illuminates for up to 30 seconds:

- When the vehicle detects the smart key in the vehicle properly whilst the Engine Start/Stop Button is ACC or ON.
  - At this time, you can start the engine.
  - The indicator light goes off after starting the engine.

This indicator light blinks for a few seconds:

- When the smart key is not in the vehicle.
  - At this time, you can not start the engine.

This indicator light illuminates for 2 seconds and goes off:

- When the vehicle can not detect the smart key which is in the vehicle whilst the Engine Start/Stop Button is ON.

  In this case, have the vehicle inspected by a professional workshop. Kia recommends to visit an authorised Kia dealer/service partner.

This indicator light blinks:

- When the battery of the smart key is weak.
  - At this time, you can not start the engine. However, you can start the engine if you press the Engine Start/Stop Button with the smart key. (For more details, refer to “Starting the Engine” in chapter 6).
- When there is a malfunction with the immobiliser system.

  In this case, have the vehicle inspected by a professional workshop. Kia recommends to visit an authorised Kia dealer/service partner.

Turn Signal Indicator Light

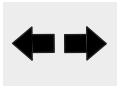

This indicator light blinks:

- When you turn the turn signal light on.

If any of the following occurs, there may a malfunction with the turn signal system. In this case, have the vehicle inspected by a professional workshop. Kia recommends to visit an authorised Kia dealer/service partner.

- The indicator light does not blink but illuminates.
- The indicator light blinks more rapidly.
- The indicator light does not illuminate at all.

Low Beam Indicator Light (if equipped)



This indicator light illuminates:

- When the headlights are on.

High Beam Indicator Light



This indicator light illuminates:

- When the headlights are on and in the high beam position
- When the turn signal lever is pulled into the Flash-to-Pass position.

Light ON Indicator Light



This indicator light illuminates:

- When the tail lights or headlights are on.

Front Fog Indicator Light (if equipped)



This indicator light illuminates:

- When the front fog lights are on.

Rear Fog Indicator Light (if equipped)



This indicator light illuminates:

- When the rear fog lights are on.

Cruise Indicator Light (if equipped)



This indicator light illuminates:

- When the cruise control system is enabled.

❈For more details, refer to “Cruise Control System” in chapter 6.

Cruise SET Indicator Light (if equipped)



This indicator light illuminates:

- When the cruise control speed is set.

❈For more details, refer to “Cruise Control System” in chapter 6.

KEY OUT Indicator Light (if equipped)

KEY OUT

When the ENGINE START/STOP button is in the ACC or ON position, if any door is open, the system checks for the smart key.

This indicator light blinks:

When the smart key is not in the vehicle and any door is open with the ignition switch or Engine Start/Stop button in the ACC or ON position.

- At this time, if you close all doors, the chime will also sound for approximately 5 seconds.
- The indicator will go off whilst the vehicle is moving.

Exhaust system (PPF) warning light (Petrol Engine) (if equipped)



This warning light illuminates:

- When there is a malfunction with Petrol Particulate Filter (PPF) system.
- When this warning light illuminates, it may turn off after driving the vehicle:
  - The vehicle should be driven for more than 30 minutes at a speed of 80k m/h (50 mph) and faster.
  - Ensure the following conditions are all met: safe road conditions, transmission 3rd gear or above, and engine speed of 1,500 - 4,000 rpm.

If this warning light blinks in spite of the procedure (at this time the LCD warning message will be displayed), have the PPF system checked by a professional workshop. Kia recommends to visit an authorised Kia dealer/service partner.

⚠ CAUTION - Petrol Engine with PPF (if equipped)

If you continue to drive with the PPF warning light blinking for a long time, the PPF system can be damaged and fuel consumption can worsen.

REAR PARKING ASSIST SYSTEM (IF EQUIPPED)



The rear parking assist system assists the driver during backward movement of the vehicle by chiming if any object is sensed within a distance of 120 cm (47 in.) behind the vehicle.

This system is a supplemental system and it is not intended to nor does it replace the need for extreme care and attention of the driver. The sensing range and objects detectable by the back sensors (①) are limited. Whenever backing-up, pay as much attention to what is behind you as you would in a vehicle without a rear parking assist system.

⚠ WARNING

The rear parking assist system is a supplementary function only. The operation of the rear parking assist system can be affected by several factors (including environmental conditions). It is the responsibility of the driver to always check the area behind the vehicle before and whilst backing up.

Operation of the rear parking assist system

Operating condition

- This system will activate when backing up with the ignition switch ON.

  If the vehicle is moving at a speed over 5 km/h (3 mph), the system may not be activated correctly.
- The sensing distance whilst the rear parking assist system is in operation is approximately 120 cm (47 in.).
- When more than two objects are sensed at the same time, the closest one will be recognized first.

Types of warning sound	Indicator*
When an object is 120 cm to 61 cm (47 in. to 24 in.) from the rear bumper: Buzzer beeps intermittently.	
When an object is 60 cm to 31 cm (23 in. to 12 in.) from the rear bumper: Buzzer beeps more frequently.	
When an object is within 30 cm (11 in.) of the rear bumper: Buzzer sounds continuously.	

* if equipped

✻ NOTICE

The indicator may differ from the illustration as objects or sensors status.
If the indicator blinks, have the system checked by a professional workshop. Kia recommends to visit an authorised Kia dealer/service partner.

Non-operational conditions of rear parking assist system

The rear parking assist system may not operate properly when:

1. Moisture is frozen to the sensor. (It will operate normally when the moisture has been cleared.)
2. The sensor is covered with foreign matter, such as snow or water, or the sensor cover is blocked. (It will operate normally when the material is removed or the sensor is no longer blocked.)
3. Driving on uneven road surfaces (unpaved roads, gravel, bumps, gradient).
4. Objects generating excessive noise (vehicle horns, loud motorcycle engines, or truck air brakes) are within range of the sensor.
5. Heavy rain or water spray exists.
6. Wireless transmitters or mobile phones are within range of the sensor.
7. The sensor is covered with snow.
8. Trailer towing

The detecting range may decrease when:

1. The sensor is stained with foreign matter such as snow or water. (The sensing range will return to normal when removed.)
2. Outside air temperature is extremely hot or cold.

The following objects may not be recognized by the sensor:

1. Sharp or slim objects such as ropes, chains or small poles.
2. Objects which tend to absorb the sensor frequency such as clothes, spongy material or snow.
3. Undetectable objects smaller than 1 m (40 in.) in height and narrower than 14 cm (6 in.) in diameter.

Rear parking assist system precautions

- The rear parking assist system may not sound consistently depending on the speed and shapes of the objects detected.
- The rear parking assist system may malfunction if the vehicle bumper height or sensor installation has been modified or damaged. Any non-factory installed equipment or accessories may also interfere with the sensor performance.
- The sensor may not recognize objects less than 30 cm (12 in.) from the sensor, or it may sense an incorrect distance. Use caution.
- When the sensor is frozen or stained with snow, dirt, or water, the sensor may be inoperative until the stains are removed using a soft cloth.
- Do not push, scratch or strike the sensor. Sensor damage could occur.

✻ NOTICE

This system can only sense objects within the range and location of the sensors; It can not detect objects in other areas where sensors are not installed. Also, small or slim objects, such as poles or objects located between sensors may not be detected by the sensors.
Always visually check behind the vehicle when backing up.
Be sure to inform any drivers of the vehicle that may be unfamiliar with the system regarding the systems capabilities and limitations.

⚠ WARNING

Pay close attention when the vehicle is driven close to objects on the road, particularly pedestrians, and especially children. Be aware that some objects may not be detected by the sensors, due to the object's distance, size or material, all of which can limit the effectiveness of the sensor. Always perform a visual inspection to make sure the vehicle is clear of all obstructions before moving the vehicle in any direction.

Self-diagnosis

If you don't hear an audible warning sound or if the buzzer sounds intermittently when shifting the gear to the R (Reverse) position, this may indicate a malfunction in the rear parking assist system. If this occurs, have the system checked by a professional workshop. Kia recommends to visit an authorised Kia dealer/service partner.

⚠ WARNING

Your new vehicle warranty does not cover any accidents or damage to the vehicle or injuries to its occupants due to a rear parking assist system malfunction. Always drive safely and cautiously.

REARVIEW CAMERA (IF EQUIPPED)


OJA046401

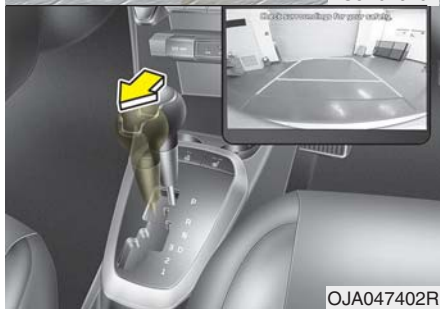
OJA047402R

The rearview camera will activate when the back-up light is ON with the ignition switch ON and the shift lever in the R (Reverse) position.

This system is a supplemental system that shows behind the vehicle through the navigation display whilst backing-up.

⚠ WARNING

- **This system is a supplementary function only. It is the responsibility of the driver to always check the inside/outside rearview mirror and the area behind the vehicle before and whilst backing up because there is a dead zone that can't be seen through the camera.**
- **Always keep the camera lens clean. If lens is covered with foreign matter, the camera may not operate normally.**

LIGHTING

Battery saver function

- The purpose of this feature is to prevent the battery from being discharged. The system automatically turns off the parking lights when the driver removes the ignition key (smart key: turns off the engine) and opens the driver-side door.
- With this feature, the parking lights will be turned off automatically if the driver parks on the side of road at night.

  If necessary, to keep the lights on when the ignition key is removed, (smart key: turns off the engine) perform the following:

  1) Open the driver-side door.
  2) Turn the parking lights OFF and ON again using the light switch on the steering column.

Headlight escort function (if equipped)

The headlights (and/or taillights) will remain on for approximately 5 minutes after the ignition key is removed when the engine is turned off. However, if the driver's door is opened and closed, the headlights are turned off after 15 seconds.

The headlights can be turned off by pressing the lock button on the transmitter (or smart key) twice or turning off the light switch from the headlight or Auto light position.

⚠ CAUTION

If the driver gets out of the vehicle through other doors (except driver's door), the battery saver function does not operate and the headlight escort function does not turn off automatically. Therefore, It causes the battery to be discharged. In this case, make sure to turn off the lamp before getting out of the vehicle.

Headlight welcome function (if equipped)

When the headlight switch is in the ON or AUTO position and all doors (and tailgate) are closed and locked, if you press the door unlock button on the transmitter (or smart key), the headlights will come on for about 15 seconds.

If the headlight switch is in the AUTO position, the function can only operate at night.

At this time, if you press the door unlock button again or door lock button on the transmitter (or smart key), the headlights will turn off immediately.

✻ NOTICE - Traffic change (for Europe)

The low beam light distribution is asymmetric. If you go abroad to a country with opposite traffic direction, this asymmetric part will dazzle oncoming car driver. To prevent dazzle, ECE regulation demand several technical solutions (ex. automatic change system, adhesive sheet, down aiming). This headlamps are designed not to dazzle opposite drivers. So, you need not change your headlamps in a country with opposite traffic direction.

Lighting control

■ Type A



OJA047458R

■ Type B



OYB046409R

The light switch has a Headlight and a Parking light position.

To operate the lights, turn the knob at the end of the control lever to one of the following positions:

(1) Off position
(2) Auto light position (if equipped)
(3) Parking light position
(4) Headlight position

Parking light position ( )

■ Type A

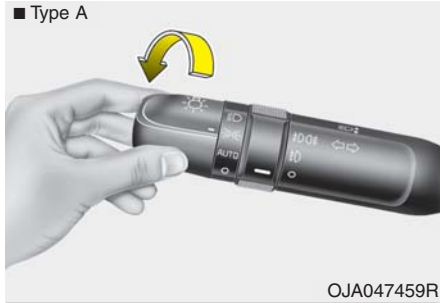

OJA047459R

■ Type B

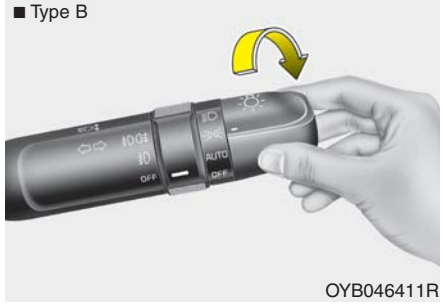

OYB046411R

When the light switch is in the parking light position (3rd position), the tail position, license and instrument panel lights will turn ON.

Headlight position ( )

■ Type A

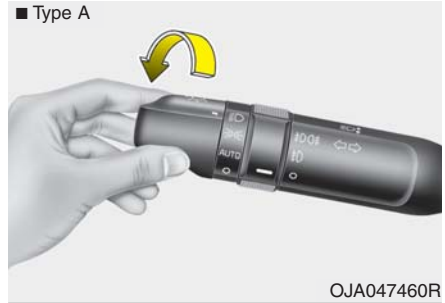

OJA047460R

■ Type B



OYB046413R

When the light switch is in the headlight position (4th position), the head, tail, position, license and instrument panel lights are ON.

✻ NOTICE

The ignition switch must be in the ON position to turn on the headlights.

Auto light position (if equipped)

■ Type A

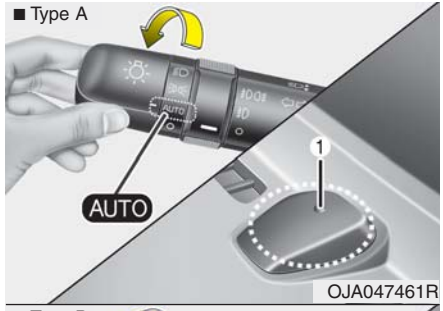

OJA047461R

■ Type B

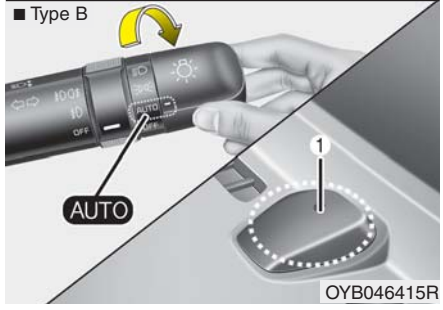

OYB046415R

When the light switch is in the AUTO light position, the taillights and headlights will be turned ON or OFF automatically depending on the amount of light outside the vehicle.

⚠ CAUTION

- ***Never place anything over sensor (1) located on the instrument panel, this will ensure better auto-light system control.***
- ***Don't clean the sensor using a window cleaner, the cleanser may leave a light film which could interfere with sensor operation.***
- ***If your vehicle has window tint or other types of metallic coating on the front windscreen, the Auto light system may not work properly.***

High beam operation

■ Type A

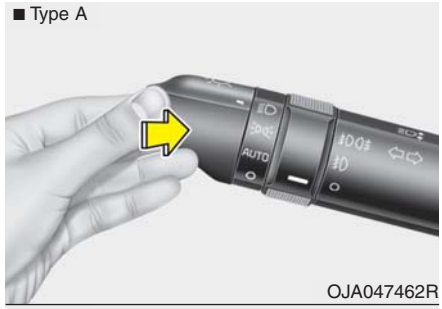

OJA047462R

■ Type B



OYB046417R

To turn on the high beam headlights, push the lever away from you when the headlight is on. Pull it back for low beams.

The high beam indicator will light when the headlight high beams are switched on. To prevent the battery from being discharged, do not leave the lights on for a prolonged time whilst the engine is not running.

⚠ WARNING

Do not use high beam when there are other vehicles. Using high beam could obstruct the other driver's vision.

■ Type A



OJA047463R

■ Type B



OYB046419R

To flash the headlights, pull the lever towards you. It will return to the normal (low beam) position when released. The headlight switch does not need to be on to use this flashing feature.

Turn signals and lane change signals

■ Type A

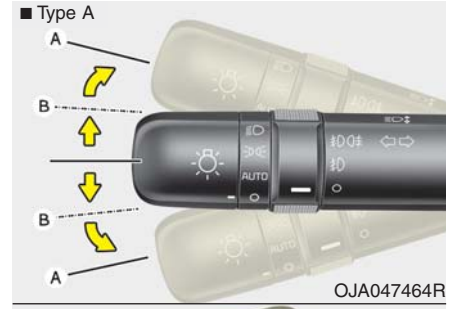

OJA047464R

■ Type B

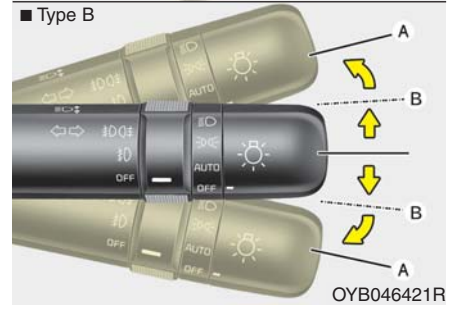

OYB046421R

The ignition switch must be on for the turn signals to function. To turn on the turn signals, move the lever up or down (A).

The green arrow indicators on the instrument panel indicate which turn signal is operating. They will self-cancel after a turn is completed.

If the indicator continues to flash after a turn, manually return the lever to the off position.

To signal a lane change, move the turn signal lever slightly and hold it in position (B). The lever will return to the off position when released.

If an indicator stays on and does not flash or if it flashes abnormally, one of the turn signal bulbs may be burned out and will require replacement.

One-touch lane change function (if equipped)

To activate an one-touch lane change function, move the turn signal lever slightly and then release it. The lane change signals will blink 3 ~ 7 times. The signal times can be changed at the lights under the User Settings Mode.

✻ NOTICE

If an indicator flash is abnormally quick or slow, a bulb may be burned out or have a poor electrical connection in the circuit.

Front fog light (if equipped)

■ Type A



OJA047465R

■ Type B



OYB046423R

Fog lights are used to provide improved visibility when visibility is poor due to fog, rain or snow, etc. The fog lights will turn on when the fog light switch (1) is turned on after the parklight is turned on.

To turn off the fog lights, turn the fog light switch (1) to the Off position.

⚠ CAUTION

When in operation, the fog lights consume large amounts of vehicle electrical power. Only use the fog lights when visibility is poor.

Rear fog light (if equipped)

■ Type A



OJA047466R

■ Type B



OYB046425R

To turn the rear fog lights on, turn the rear fog light switch (1) to the on position when the headlight is turned on.

Also, the rear fog lights turn on when the rear fog light switch is turned on after the front fog light switch (if equipped) is turned on and the headlight switch is in the parklight position.

To turn off the fog lights, turn the fog light switch (1) to the Off position.

✻ NOTICE

Rear fog light is only on the driver's side (if equipped).

Daytime running light (if equipped)

The Daytime Running Lights (DRL) can make it easier for others to see the front of your vehicle during the day. DRL can be helpful in many different driving conditions, and it is especially helpful after dawn and before sunset.

The DRL system turns OFF when:

1. The headlight switch is on
2. The engine is off
3. The front fog light is on.
4. The Setting the Parking Brake

Headlight levelling device (if equipped)

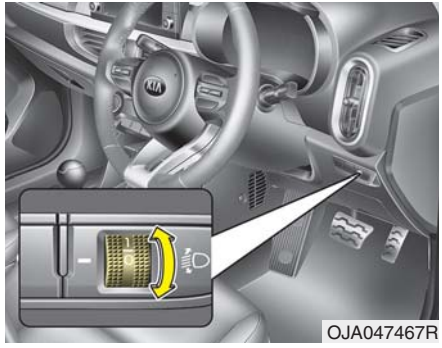

To adjust the headlight beam level according to the number of the passengers and loading weight in the luggage area, turn the beam levelling switch.

The higher the number of the switch position, the lower the headlight beam level. Always keep the headlight beam at the proper levelling position, or headlights may dazzle other road users.

Listed below are the examples of proper switch settings. For loading conditions other than those listed below, adjust the switch position so that the beam level may be the nearest as the condition obtained according to the list.

Loading condition	Switch position
Driver only	0
Driver + Front passenger	0
Full passengers (including driver)	1
Full passengers (including driver) + Maximum permissible loading	2
Driver + Maximum permissible loading	3

WIPERS AND WASHERS

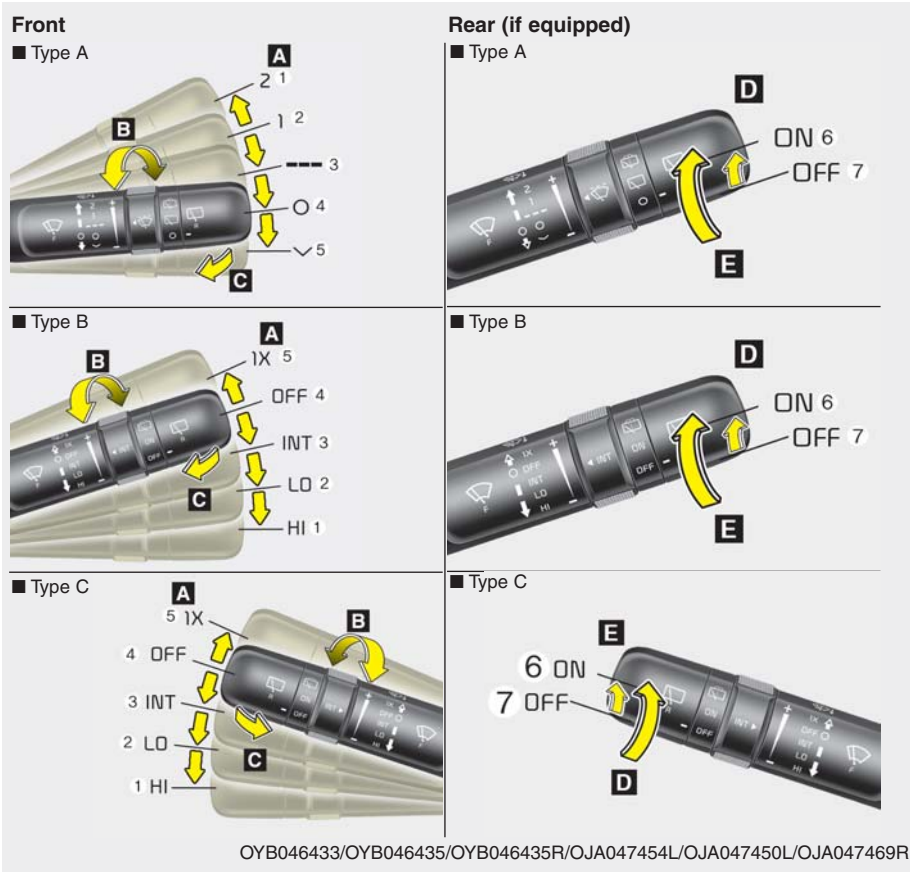

OYB046433/OYB046435/OYB046435R/OJA047454L/OJA047450L/OJA047469R

A : Wiper speed control (front)
(1) 2/HI – High wiper speed
(2) 1/LO – Low wiper speed
(3) ---/INT – Intermittent wipe
(4) O/OFF – Off
(5) ∨ /1X – Single wipe

B : Intermittent control wipe time adjustment

C : Wash with brief wipes (front)*

D : Rear wiper/washer control*
(6) /ON – Intermittent wipe
(7) O/OFF – Off

E : Wash with brief wipes (rear)*

* : if equipped

Windscreen wipers (front)

Operates as follows when the ignition switch is turned ON.

(1) 2/HI : Fast wiper speed

(2) 1/LO :Normal wiper speed

(3) ---/INT : Wiper operates intermittently at the same wiping intervals. Use this mode in light rain or mist. To vary the speed setting, turn the speed control knob.

(4) O/OFF : Wiper is not in operation

(5) ∨/1X : For a single wiping cycle, move the lever to this position and release it. The wipers will operate continuously if the lever is held in this position.

✻ NOTICE

If there is heavy accumulation of snow or ice on the windscreen, defrost the windscreen for about 10 minutes, or until the snow and/or ice is removed before using the windscreen wipers to ensure proper operation. If you do not remove the snow and/or ice before using the wiper and washer, it may damage the wiper and washer system.

Windscreen washers (front)

■ Type A

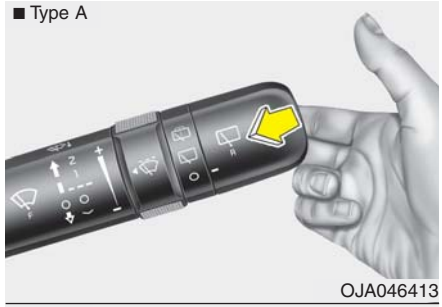

OJA046413

■ Type B

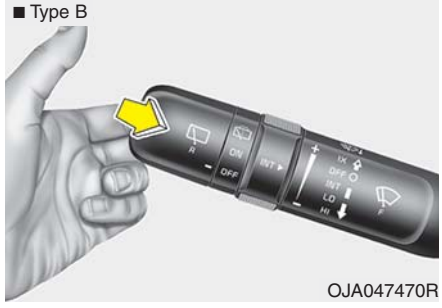

OJA047470R

In the O (Off) position, pull the lever gently toward you to spray washer fluid on the windscreen and to run the wipers 1-3 cycles.

Use this function when the windscreen is dirty.

The spray and wiper operation will continue until you release the lever.

If the washer does not work, check the washer fluid level. If the fluid level is not sufficient, you will need to add appropriate non-abrasive windscreen washer fluid to the washer reservoir.

The reservoir filler neck is located in the front of the engine compartment on the driver side.

⚠ CAUTION

To prevent possible damage to the washer pump, do not operate the washer when the fluid reservoir is empty.

⚠ WARNING

Do not use the washer in freezing temperatures without first warming the windscreen with the defrosters; the washer solution could freeze on the windscreen and obscure your vision.

⚠ CAUTION

- ***To prevent possible damage to the wipers or windscreen, do not operate the wipers when the windscreen is dry.***
- ***To prevent damage to the wiper blades, do not use petrol, kerosene, paint thinner, or other solvents on or near them.***
- ***To prevent damage to the wiper arms and other components, do not attempt to move the wipers manually.***
- ***To prevent possible damage to the wipers and washer system, use anti-freezing washer fluids in the winter season or cold weather.***

Heated washer nozzle (if equipped)

The heated washer nozzle function defreeze the washer nozzles in freezing weather.

The heated washer nozzle will turn on and off automatically when the ignition switch is in ON or when the engine is running in following conditions:

- Turns ON when the outside temperature is below 5°C, and OFF when it is over 10°C.
- The washer fluid defreezing speed may be slower when the ignition is in ON, than compared to when the engine is running.
- When the ignition is in ON, after 20 minutes of operation, the system will turn off automatically to prevent possible battery discharge.
- After the engine is running, the washer fluid will defrost after 5 to 10 minutes.
- If the engine has been started within the operating temperature, the heated nozzle remains ON even after 20 minutes.

✻ NOTICE

In below conditions, the heated washer nozzle may not function properly.

- **The washer fluids in the washer reservoir is frozen.**
- **Outside temperature sensor is malfunctioning.**

Rear window wiper and washer switch (if equipped)

■ Type A

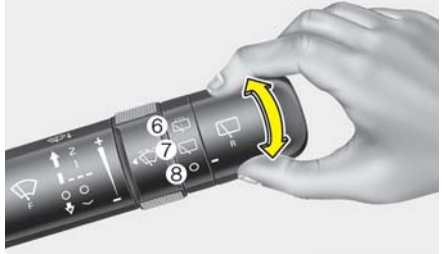

OJA046436

■ Type B

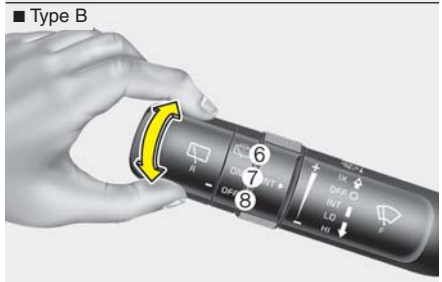

OJA047471R

The rear window wiper and washer switch is located at the end of the wiper and washer switch lever.

Turn the switch to desired position to operate the rear wiper and washer.

(6) Rear window washer

(7) Intermittent wipe

(8) Wiper is not in operation

■ Type A



OYB046460

■ Type B



OYB046460R

Turn the wiper lever switch upwards twice to spray rear washer fluid and to run the rear wipers 1~3 cycles. The spray and wiper operation will continue until you release the lever.

INTERIOR LIGHT

⚠ CAUTION

Do not use the interior lights for extended periods when engine is not running.

It may cause battery discharge.

⚠ WARNING

Do not use the interior lights when driving in the dark. Accidents could happen because the view may be obscured by interior lights.

Map lamp/Room lamp (if equipped)

■ Map lamp

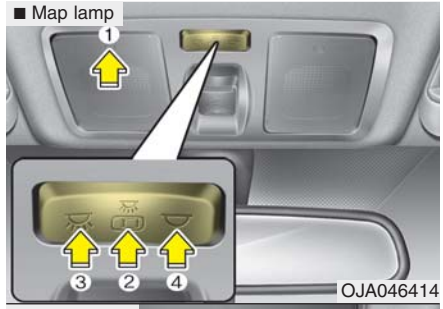

■ Room lamp

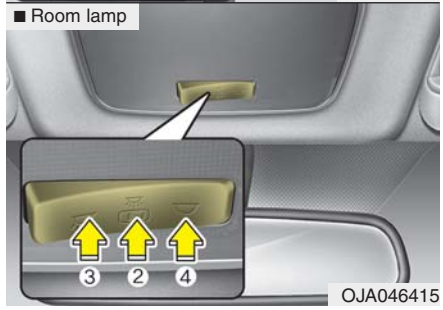

• (1) : Press the lamps to turn the front map lamps on and off.

• (2) :

- The map lamp and room lamp comes on when a door is opened. The lamps go out after approximately 30 seconds.
- The map lamp and room lamp comes on for approximately 30 seconds when doors are unlocked with a transmitter or smart key as long as the doors are not opened.
- The map lamp and room lamp will stay on for approximately 20 minutes if a door is opened with the ignition switch in the ACC or LOCK/OFF position.
- The map lamp and room lamp will stay on continuously if the door is opened with the ignition switch in the ON position.
- The map lamp and room lamp will go out immediately if the ignition switch is changed to the ON position or all doors are locked.
- To turn off the DOOR mode, press the DOOR button (2) once again (not pressed).

✻ NOTICE

The DOOR mode and ROOM mode can not be selected at a time.

- (3): Press this switch to turn the front map lamps on.
- (4): Press this switch to turn the front map lamps off.

Luggage room lamp (if equipped)


OJA046416

The luggage room lamp comes on when the tailgate is opened.

⚠ CAUTION

The luggage room lamp comes on as long as the tailgate opens. To prevent unnecessary charging system drain, close the tailgate securely after using the luggage room.

Vanity mirror lamp (if equipped)

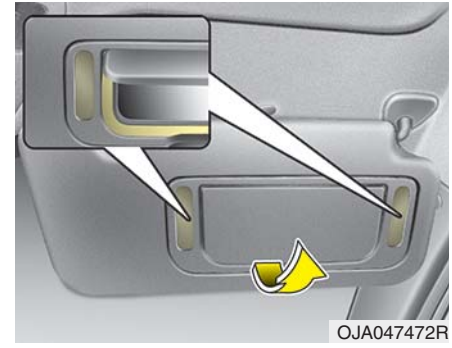
OJA047472R

Opening the lid of the vanity mirror will automatically turn on the mirror light.

⚠ CAUTION - Vanity mirror lamp (if equipped)

Close the vanity mirror cover securely and return the sunvisor to its original position after use. If the vanity mirror is not closed securely, the lamp will stay on and could result in battery discharge and possible sunvisor damage.

DEFROSTER

⚠ CAUTION

To prevent damage to the conductors bonded to the inside surface of the rear window, never use sharp instruments or window cleaners containing abrasives to clean the window.

✻ NOTICE

If you want to defrost and defog the front windscreen, refer to "Windscreen defrosting and defogging" in this section.

Rear window defroster



OJA046301

The defroster heats the window to remove frost, fog and thin ice from the rear window, whilst the engine is running.

To activate the rear window defroster, press the rear window defroster button.

The indicator on the rear window defroster button illuminates when the defroster is ON.

If there is heavy accumulation of snow on the rear window, brush it off before operating the rear defroster.

The rear window defroster automatically turns off after approximately 20 minutes or when the ignition switch is turned off. To turn off the defroster, press the rear window defroster button again.

Outside rearview mirror defroster (if equipped)

If your vehicle is equipped with the outside rearview mirror defrosters, they will operate at the same time you turn on the rear window defroster.

MANUAL CLIMATE CONTROL SYSTEM (IF EQUIPPED)



1. Fan speed control knob
2. Mode selection knob
3. Temperature control knob
4. Air conditioning button (if equipped)
5. Rear window defroster button
6. Air intake control button

⚠ CAUTION

Operating the blower when the ignition switch is in the ON position could cause the battery to discharge. Operate the blower when the engine is running.

OJA047314R

Heating and air conditioning

1. Start the engine.
2. Set the mode to the desired position.

   For improving the effectiveness of heating and cooling;

   - Heating:
   - Cooling:
3. Set the temperature control to the desired position.
4. Set the air intake control to the outside (fresh) air position.
5. Set the fan speed control to the desired speed.
6. If air conditioning is desired, turn the air conditioning (if equipped) system on.

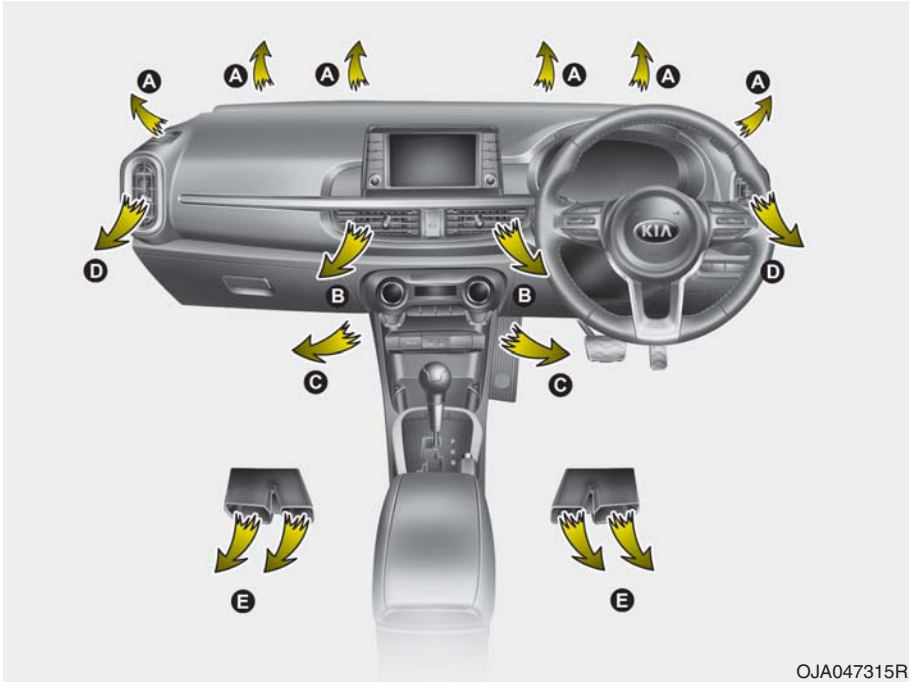

OJA047315R

Mode selection



OJA046316

The mode selection knob controls the direction of the air flow through the ventilation system.

Air can be directed to the floor, dashboard outlets, or windscreen. Five symbols are used to represent Face, Bi-Level, Floor, Floor-Defrost and Defrost air position.

Face-Level (B, D)

Air flow is directed toward the upper body and face. Additionally, each outlet can be controlled to direct the air discharged from the outlet.

Bi-Level (B, D, C, E)

Air flow is directed towards the face and the floor.

Floor-Level (C, E, A, D)

Most of the air flow is directed to the floor, with a small amount of the air being directed to the windscreen and side window defrosters.

Floor/Defrost-Level (A, C, D, E)

Most of the air flow is directed to the floor and the windscreen with a small amount directed to the side window defrosters.

Defrost-Level (A, D)

Most of the air flow is directed to the windscreen with a small amount of air directed to the side window defrosters.

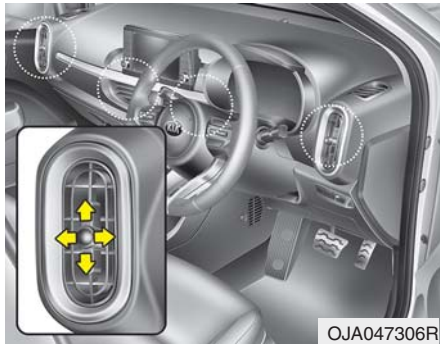

Instrument panel vents

The outlet vents can be opened or closed separately using the thumb-wheel. To close the vent, rotate it downward to the maximum position.

Also, you can adjust the direction of air delivery from these vents using the vent control lever as shown.

Temperature control



The temperature control knob allows you to control the temperature of the air flowing from the ventilation system. To change the air temperature in the passenger compartment, turn the knob to the right position for warm and hot air or left position for cooler air.

Air intake control



The air intake control is used to select the outside (fresh) air position or recirculated air position.

To change the air intake control position, press the control button.

Recirculated air position



With the recirculated air position selected, air from the passenger compartment will be drawn through the heating system and heated or cooled according to the function selected.

Outside (fresh) air position



With the outside (fresh) air position selected, air enters the vehicle from outside and is heated or cooled according to the function selected.

✻ NOTICE

Prolonged operation of the heater in the recirculated air position (without air conditioning selected) may cause fogging of the windscreen and side windows and the air within the passenger compartment may become stale.
In addition, prolonged use of the air conditioning with the recirculated air position selected will result in excessively dry air in the passenger compartment.

⚠ WARNING

- **Continue using the climate control system in the recirculated air position may allow humidity to increase inside the vehicle which may fog the glass and obscure visibility.**
- **Do not sleep in a vehicle with the air conditioning or heating system on. It may cause serious harm or death due to a drop in the oxygen level and/or body temperature.**
- **Continue using the climate control system in the recirculated air position can cause drowsiness or sleepiness, and loss of vehicle control. Set the air intake control to the outside (fresh) air position as much as possible whilst driving.**

Fan speed control



OJA046318

The ignition switch must be in the ON position for fan operation.

The fan speed control knob allows you to control the fan speed of the air flowing from the ventilation system. To change the fan speed, turn the knob to the right for higher speed or left for lower speed.

Setting the fan speed control knob to the “0” position turns off the fan.

To turn off the blowers



OJA046319

To turn off the blowers, turn the fan speed control knob to the “0” position.

Air conditioning (A/C)

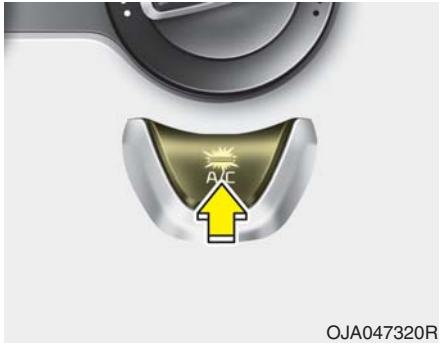

OJA047320R

Press the A/C button to turn the air conditioning system on (indicator light will illuminate). Press the button again to turn the air conditioning system off.

System operation

Ventilation

1. Set the mode to the position.
2. Set the air intake control to the outside (fresh) air position.
3. Set the temperature control to the desired position.
4. Set the fan speed control to the desired speed.

Heating

1. Set the mode to the position.
2. Set the air intake control to the outside (fresh) air position.
3. Set the temperature control to the desired position.
4. Set the fan speed control to the desired speed.
5. If dehumidified heating is desired, turn the air conditioning system (if equipped) on.

- If the windscreen fogs up, set the mode to the or position.

Operation Tips

- To keep dust or unpleasant fumes from entering the vehicle through the ventilation system, temporarily set the air intake control to the recirculated air position. Be sure to return the control to the fresh air position when the irritation has passed to keep fresh air in the vehicle. This will help keep the driver alert and comfortable.
- Air for the heating/cooling system is drawn in through the grilles just ahead of the windscreen. Care should be taken that these are not blocked by leaves, snow, ice or other obstructions.
- To prevent interior fog on the windscreen, set the air intake control to the fresh air position and fan speed to the desired position, turn on the air conditioning system, and adjust the temperature control to desired temperature.

Air conditioning

Kia Air Conditioning Systems are filled with environmentally friendly refrigerant*.

1. Start the engine. Push the air conditioning button.
2. Set the mode to the position.
3. Set the air intake control to the outside air or recirculated air position.
4. Adjust the fan speed control and temperature control to maintain maximum comfort.

*: Your vehicle is filled with R-134a or R-1234yf according to the regulation in your country at the time of producing. You can find out which air conditioning refrigerant is applied your vehicle at the label inside of engine room. Refer to section 9 for more detail location of air conditioning refrigerant label.

⚠ CAUTION

- ***The refrigerant system should only be serviced by trained and certified technicians to insure proper and safe operation.***
- ***The refrigerant system should be serviced in a well-ventilated place.***
- ***The air conditioning evaporator (cooling coil) shall never be repaired or replaced with one removed from a used or salvaged vehicle and new replacement MAC evaporators shall be certified (and labeled) as meeting SAE Standard J2842.***

✻ NOTICE

- **When using the air conditioning system, monitor the temperature gauge closely whilst driving up hills or in heavy traffic when outside temperatures are high. Air conditioning system operation may cause engine overheating. Continue to use the blower fan but turn the air conditioning system off if the temperature gauge indicates engine overheating.**
- **When opening the windows in humid weather air conditioning may create water droplets inside the vehicle. Since excessive water droplets may cause damage to electrical equipment, air conditioning should only be used with the windows closed.**

Air conditioning system operation tips

- If the vehicle has been parked in direct sunlight during hot weather, open the windows for a short time to let the hot air inside the vehicle escape.
- To help reduce moisture inside of the windows on rainy or humid days, decrease the humidity inside the vehicle by operating the air conditioning system.
- During air conditioning system operation, you may occasionally notice a slight change in engine speed as the air conditioning compressor cycles. This is a normal system operation characteristic.
- Use the air conditioning system every month only for a few minutes to ensure maximum system performance.

- When using the air conditioning system, you may notice clear water dripping (or even puddling) on the ground under the passenger side of the vehicle. This is a normal system operation characteristic.
- Operating the air conditioning system in the recirculated air position provides maximum cooling, however, continual operation in this mode may cause the air inside the vehicle to become stale.
- During cooling operation, you may occasionally notice a misty air flow because of rapid cooling and humid air intake. This is a normal system operation characteristic.

Climate control air filter (if equipped)

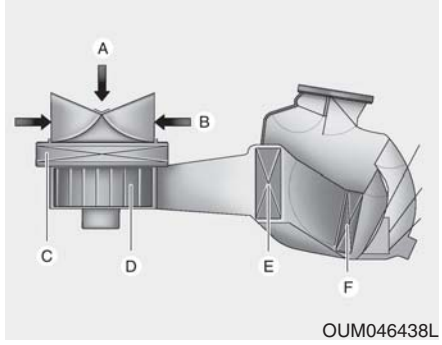

OUM046438L

A : Outside air
B : Recirculated air
C : Climate control air filter
D : Blower
E : Evaporator core
F : Heater core

The climate control air filter installed behind the glove box filters the dust or other pollutants that come into the vehicle from the outside through the heating and air conditioning system.

If dust or other pollutants accumulate in the filter over a period of time, the air flow from the air vents may decrease, resulting in moisture accumulation on the inside of the windscreen even when the outside (fresh) air position is selected. If this happens, have the climate control air filter replaced by a professional workshop. Kia recommends to visit an authorised Kia dealer/service partner.

✻ NOTICE

- **Replace the filter according to the Maintenance Schedule.**
  If the vehicle is being driven in severe conditions such as dusty or rough roads, more frequent air conditioner filter inspections and changes are required.
- **When the air flow rate suddenly decreases, have the system checked by a professional workshop. Kia recommends to visit an authorised Kia dealer/service partner.**

Air Conditioning refrigerant label

■ Example

Type A



OUM066034L

Type B



OUM066035L

❈ The actual Air Conditioning refrigerant label in the vehicle may differ from the illustration.

Each symbols and specification on air conditioning refrigerant label means as below ;

1. Classification of refrigerant
2. Amount of refrigerant
3. Classification of Compressor lubricant

You can find out which air conditioning refrigerant is applied your vehicle at the label inside of the engine room.

Refer to section 9 for more detail location of air conditioning refrigerant label.

Checking the amount of air conditioner refrigerant and compressor lubricant

When the amount of refrigerant is low, the performance of the air conditioning is reduced. Overfilling also has a bad influence on the air conditioning system.

Therefore, if abnormal operation is found, have the system inspected by a professional workshop. Kia recommends to visit an authorised Kia dealer/service partner.

⚠ WARNING - Vehicles equipped with R-134a*



Because the refrigerant is at very high pressure, the air conditioning system should only be serviced by trained and certified technicians. It is important that the correct type and amount of oil and refrigerant is used.

Otherwise, it may cause damage to the vehicle and personal injury.

⚠ WARNING - Vehicles equipped with R-1234yf*



Because the refrigerant is mildly inflammable and at very high pressure, the air conditioning system should only be serviced by trained and certified technicians. It is important that the correct type and amount of oil and refrigerant is used.

Otherwise, it may cause damage to the vehicle and personal injury.

*: Your vehicle is filled with R-134a or R-1234yf according to the regulation in your country at the time of producing. You can find out which air conditioning refrigerant is applied your vehicle at the label inside of engine room. Refer to section 9 for more detail location of air conditioning refrigerant label.

AUTOMATIC CLIMATE CONTROL SYSTEM (IF EQUIPPED)



1. Temperature control knob
2. AUTO (automatic control) button
3. Climate control display
4. Fan speed control knob
5. OFF button
6. Front windscreen defroster button
7. Rear window defroster button
8. Mode selection button
9. Air conditioning button (if equipped)
10. Air intake control button

⚠ CAUTION

Operating the blower when the ignition switch is in the ON position could cause the battery to discharge. Operate the blower when the engine is running.

OJA046300

Automatic heating and air conditioning



OJA046302

1. Push the AUTO button. The modes, fan speeds, air intake and air-conditioning will be controlled automatically according to the temperature setting.



OJA046303

2. Set the temperature control knob to set the desired temperature.

✻ NOTICE

- **To turn the automatic operation off, select any button or switch of the following:**
  - **Mode selection button**
  - **Air conditioning button**
  - **Front windscreen defroster button (Press the button one more time to deselect the front windscreen defroster function. The AUTO sign will illuminate on the information display once again.)**
  - **Air intake control button**
  - **Fan speed control knob**

  The selected function will be controlled manually whilst other functions operate automatically.
- **For your convenience and to improve the effectiveness of the climate control, use the AUTO button and set the temperature to 23°C (73°F).**

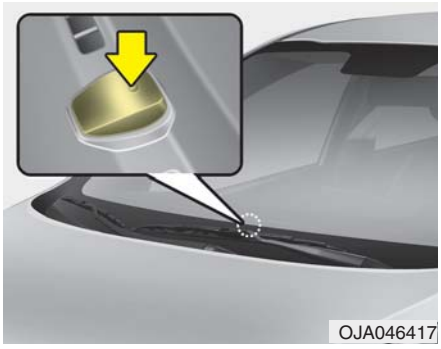

✻ NOTICE

Never place anything over the sensor located on the instrument panel to ensure better control of the heating and cooling system.

Manual heating and air conditioning

The heating and cooling system can be controlled manually by pushing buttons other than the AUTO button. In this case, the system works sequentially according to the order of buttons selected.

When pressing any button (or turning any knob) except the AUTO button whilst using automatic operation, the functions not selected will be controlled automatically.

1. Start the engine.
2. Set the mode to the desired position.

   To improve the effectiveness of heating and cooling:

   - Heating:
   - Cooling:
3. Set the temperature control to the desired position.
4. Set the air intake control to the outside (fresh) air position.
5. Set the fan speed control to the desired speed.
6. If air conditioning is desired, turn the air conditioning system on.

Press the AUTO button in order to convert to full automatic control of the system.

Mode selection



OJA046304

The mode selection button controls the direction of the air flow through the ventilation system.

The air flow outlet port is converted as follows:



Refer to the illustration in the “Manual climate control system”.

Floor & Defrost (A, C, D, E)

Most of the air flow is directed to the floor and the windscreen with a small amount directed to the side window defrosters.

Face-Level (B, D)

Air flow is directed toward the upper body and face. Additionally, each outlet can be controlled to direct the air discharged from the outlet.

Bi-Level (B, D, C, E)

Air flow is directed towards the face and the floor.

Floor-Level (C, A, D, E)

Most of the air flow is directed to the floor, with a small amount of the air being directed to the windscreen and side window defrosters.



OJA046305

Defrost mode

When you select the defrost mode, the following system settings will be made automatically:

- The air conditioning system will be turned on.
- The outside(fresh) air position will be selected.
- The fan speed will be set to the high speed.

To turn the defrost mode off, press the mode button or defrost button again or AUTO button.

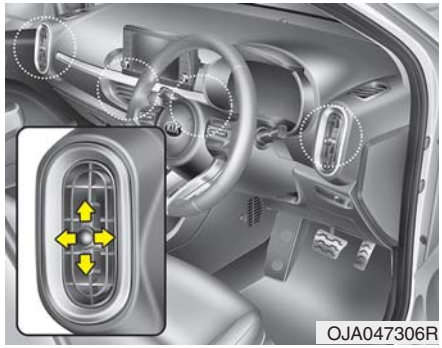
OJA047306R

Instrument panel vents

The outlet port can be opened or closed separately using the horizontal thumbwheel. To close the vent, rotate it downward to the maximum position. To open the vent, rotate it upward to the desired position.

Also, you can adjust the direction of air delivered from these vents using the vent control lever as shown.

Temperature control



OJA046303

The temperature will increase to the maximum (HI) by turning the knob to the right extremely.

The temperature will decrease to the minimum (Lo) by turning the knob to the left extremely.

When turning the knob, the temperature will increase or decrease by 0.5°C/1°F. When set to the lowest temperature setting, the air conditioning will operate continuously.

Temperature conversion

You can switch the temperature mode between Centigrade to Fahrenheit as follows:

Whilst pressing the OFF button, press the AUTO button for 4 seconds or more.

The display will change from Centigrade to Fahrenheit, or from Fahrenheit to Centigrade.

If the battery has been discharged or disconnected, the temperature mode display will reset to Centigrade.

Air intake control



OJA046308

This is used to select the outside (fresh) air position or recirculated air position.

To change the air intake control position, press the control button.

Recirculated air position



With the recirculated air position selected, air from the passenger compartment will be drawn through the heating system and heated or cooled according to the function selected.

Outside (fresh) air position



With the outside (fresh) air position selected, air enters the vehicle from outside and is heated or cooled according to the function selected.

✻ NOTICE

Prolonged operation of the heater in the recirculated air position (without air conditioning selected) may cause fogging of the windscreen and side windows and the air within the passenger compartment may become stale.

In addition, prolonged use of the air conditioning with the recirculated air position selected will result in excessively dry air in the passenger compartment.

⚠ WARNING

- **Continued climate control system operation in the recirculated air position may allow humidity to increase inside the vehicle which may fog the glass and obscure visibility.**
- **Do not sleep in a vehicle with the air conditioning or heating system on. It may cause serious harm or death due to a drop in the oxygen level and/or body temperature.**
- **Continued climate control system operation in the recirculated air position can cause drowsiness or sleepiness, and loss of vehicle control. Set the air intake control to the outside (fresh) air position as much as possible whilst driving.**

Fan speed control



OJA046307

The fan speed can be set to the desired speed by operating the fan speed control knob.

The higher the fan speed is, the more air is delivered.

Pressing the OFF button turns off the fan.

Air conditioning (A/C)



OJA046309

Press the A/C button to turn the air conditioning system on (indicator light will illuminate).

Press the button again to turn the air conditioning system off.

OFF mode



OJA046310

Press the OFF button to turn off the air climate control system. However, you can still operate the air intake buttons as long as the ignition switch is in the ON position.

System operation

Ventilation

1. Set the mode to the position.
2. Set the air intake control to the outside (fresh) air position.
3. Set the temperature control to the desired position.
4. Set the fan speed control to the desired speed.

Heating

1. Set the mode to the position.
2. Set the air intake control to the outside (fresh) air position.
3. Set the temperature control to the desired position.
4. Set the fan speed control to the desired speed.
5. If dehumidified heating is desired, turn the air conditioning system (if equipped) on.

- If the windscreen fogs up, set the mode to the or position.

Operation Tips

- To keep dust or unpleasant fumes from entering the vehicle through the ventilation system, temporarily set the air intake control to the recirculated air position. Be sure to return the control to the fresh air position when the irritation has passed to keep fresh air in the vehicle. This will help keep the driver alert and comfortable.
- Air for the heating/cooling system is drawn in through the grilles just ahead of the windscreen. Care should be taken that these are not blocked by leaves, snow, ice or other obstructions.
- To prevent interior fog on the windscreen, set the air intake control to the fresh air position and fan speed to the desired position, turn on the air conditioning system, and adjust the temperature control to desired temperature.

Air conditioning

Kia Air Conditioning Systems are filled with environmentally friendly refrigerant*.

1. Start the engine. Push the air conditioning button.
2. Set the mode to the position.
3. Set the air intake control to the outside air or recirculated air position.
4. Adjust the fan speed control and temperature control to maintain maximum comfort.

*: Your vehicle is filled with R-134a or R-1234yf according to the regulation in your country at the time of producing. You can find out which air conditioning refrigerant is applied your vehicle at the label inside of engine room. Refer to section 9 for more detail location of air conditioning refrigerant label.

⚠ CAUTION

- ***The refrigerant system should only be serviced by trained and certified technicians to insure proper and safe operation.***
- ***The refrigerant system should be serviced in a well-ventilated place.***
- ***The air conditioning evaporator (cooling coil) shall never be repaired or replaced with one removed from a used or salvaged vehicle and new replacement MAC evaporators shall be certified (and labeled) as meeting SAE Standard J2842.***

✻ NOTICE

- **When using the air conditioning system, monitor the temperature gauge closely whilst driving up hills or in heavy traffic when outside temperatures are high. Air conditioning system operation may cause engine overheating. Continue to use the blower fan but turn the air conditioning system off if the temperature gauge indicates engine overheating.**
- **When opening the windows in humid weather air conditioning may create water droplets inside the vehicle. Since excessive water droplets may cause damage to electrical equipment, air conditioning should only be used with the windows closed.**

Air conditioning system operation tips

- If the vehicle has been parked in direct sunlight during hot weather, open the windows for a short time to let the hot air inside the vehicle escape.
- To help reduce moisture inside of the windows on rainy or humid days, decrease the humidity inside the vehicle by operating the air conditioning system.
- During air conditioning system operation, you may occasionally notice a slight change in engine speed as the air conditioning compressor cycles. This is a normal system operation characteristic.
- Use the air conditioning system every month only for a few minutes to ensure maximum system performance.
- When using the air conditioning system, you may notice clear water dripping (or even puddling) on the ground under the passenger side of the vehicle. This is a normal system operation characteristic.
- Operating the air conditioning system in the recirculated air position provides maximum cooling, however, continual operation in this mode may cause the air inside the vehicle to become stale.
- During cooling operation, you may occasionally notice a misty air flow because of rapid cooling and humid air intake. This is a normal system operation characteristic.

Climate control air filter (if equipped)

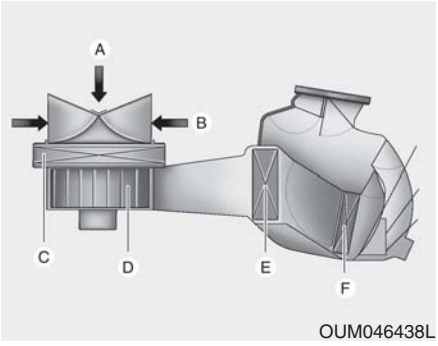

OUM046438L

A : Outside air
B : Recirculated air
C : Climate control air filter
D : Blower
E : Evaporator core
F : Heater core

The climate control air filter installed behind the glove box filters the dust or other pollutants that come into the vehicle from the outside through the heating and air conditioning system.

If dust or other pollutants accumulate in the filter over a period of time, the air flow from the air vents may decrease, resulting in moisture accumulation on the inside of the windscreen even when the outside (fresh) air position is selected. If this happens, have the climate control air filter replaced by a professional workshop. Kia recommends to visit an authorised Kia dealer/service partner.

✻ NOTICE

- **Replace the filter according to the Maintenance Schedule.**
  If the vehicle is being driven in severe conditions such as dusty or rough roads, more frequent air conditioner filter inspections and changes are required.
- **When the air flow rate suddenly decreases, have the system checked by a professional workshop. Kia recommends to visit an authorised Kia dealer/service partner.**

Air Conditioning refrigerant label

■ Example

Type A



OUM066034L

Type B



OUM066035L

✻ The actual Air Conditioning refrigerant label in the vehicle may differ from the illustration.

Each symbols and specification on air conditioning refrigerant label means as below ;

1. Classification of refrigerant
2. Amount of refrigerant
3. Classification of Compressor lubricant

You can find out which air conditioning refrigerant is applied your vehicle at the label inside of the engine room.

Refer to section 9 for more detail location of air conditioning refrigerant label.

Checking the amount of air conditioner refrigerant and compressor lubricant

When the amount of refrigerant is low, the performance of the air conditioning is reduced. Overfilling also has a bad influence on the air conditioning system.

Therefore, if abnormal operation is found, have the system inspected by a professional workshop. Kia recommends to visit an authorised Kia dealer/service partner.

⚠ WARNING - Vehicles equipped with R-134a*



Because the refrigerant is at very high pressure, the air conditioning system should only be serviced by trained and certified technicians. It is important that the correct type and amount of oil and refrigerant is used.

Otherwise, it may cause damage to the vehicle and personal injury.

⚠ WARNING - Vehicles equipped with R-1234yf*



Because the refrigerant is mildly inflammable and at very high pressure, the air conditioning system should only be serviced by trained and certified technicians. It is important that the correct type and amount of oil and refrigerant is used.

Otherwise, it may cause damage to the vehicle and personal injury.

*: Your vehicle is filled with R-134a or R-1234yf according to the regulation in your country at the time of producing. You can find out which air conditioning refrigerant is applied your vehicle at the label inside of engine room. Refer to section 9 for more detail location of air conditioning refrigerant label.

WINDSCREEN DEFROSTING AND DEFOGGING

⚠ WARNING - Windscreen heating

Do not use the or position during cooling operation in extremely humid weather. The difference between the temperature of the outside air and that of the windscreen could cause the outer surface of the windscreen to fog up, causing loss of visibility. In this case, set the mode selection knob or button to the position and fan speed control knob or button to the lower speed.

- For maximum defrosting, set the temperature control to the extreme right/hot position and the fan speed control to the highest speed.
- If warm air to the floor is desired whilst defrosting or defogging, set the mode to the floor-defrost position.
- Before driving, clear all snow and ice from the windscreen, rear window, outside rear view mirrors, and all side windows.
- Clear all snow and ice from the bonnet and air inlet in the cowl grill to improve heater and defroster efficiency and to reduce the probability of fogging up the inside of the windscreen.

Manual climate control system

To defog inside windscreen



1. Select any fan speed except “0” position.
2. Select desired temperature.
3. Select the or position.
4. The outside (fresh) air and air conditioning will be selected automatically.

If the air conditioning and outside (fresh) air position are not selected automatically, press the corresponding button manually.

To defrost outside windscreen



1. Set the fan speed to the highest (extreme right) position.
2. Set the temperature to the extreme hot position.
3. Select the position.
4. The outside (fresh) air and air conditioning will be selected automatically.

Automatic climate control system

To defog inside windscreen



1. Set the fan speed to the desired position.
2. Select desired temperature.
3. Press the defrost button ( ).
4. The air conditioning will be turned on according to the detected ambient temperature and outside (fresh) air position will be selected automatically.

If the air conditioning and outside (fresh) air position are not selected automatically, adjust the corresponding button manually. If the position is selected, lower fan speed is adjusted to a higher fan speed.

To defrost outside windscreen



1. Set the fan speed to the highest (extreme right) position.
2. Set the temperature to the extreme hot (HI) position.
3. Press the defrost button ( ).
4. The air conditioning will be turned on according to the detected ambient temperature and outside (fresh) air position will be selected automatically.

If the position is selected, lower fan speed is adjusted to a higher fan speed.

Defogging logic (if equipped)

To reduce the possibility of fogging up the inside of the windscreen, the air intake or air conditioning are controlled automatically according to certain conditions such as or position. To cancel or return to the defogging logic, do the following.

Automatic climate control system (if equipped)

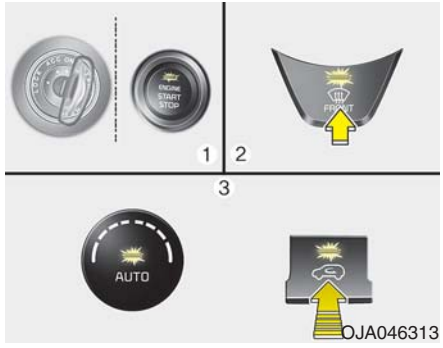

1. Turn the ignition switch to the ON position.
2. Select the defrost position pressing defrost button ( ).
3. Whilst holding the air conditioning button (A/C) pressed, press the air intake control button at least 5 times within 3 seconds.

The air intake control button indicator blinks 3 times. It indicates that the defogging logic is canceled or returned to the programmed status.

If the battery has been discharged or disconnected, it is reset to the defog logic status.

STORAGE COMPARTMENTS

These compartments can be used to store small items required by the driver or passengers.

⚠ CAUTION

- ***To avoid possible theft, do not leave valuables in the storage compartments.***
- ***Always keep the storage compartment covers closed whilst driving. Do not attempt to place so many items in the storage compartment that the storage compartment cover cannot close securely.***

⚠ WARNING - Flammable materials

Do not store cigarette lighters, propane cylinders, or other flammable/explosive materials in the vehicle. These items may catch fire and/or explode if the vehicle is exposed to hot temperatures for extended periods.

Centre console storage (if equipped)

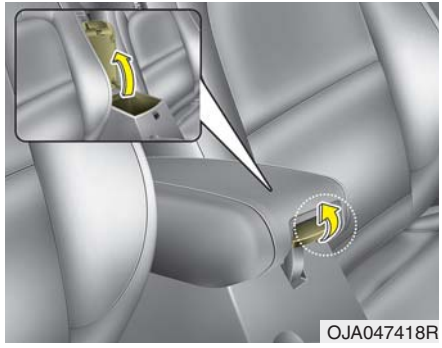
OJA047418R

These compartments can be used to store small items required by the driver or front passenger.

To open the centre console storage pull up the lever.

Glove box

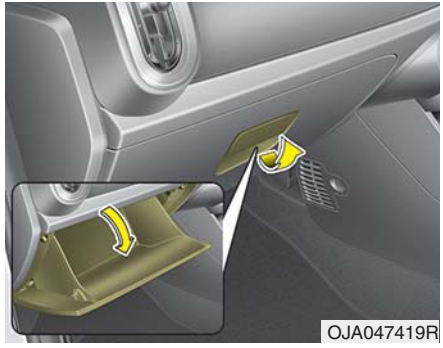

To open the glove box, pull the handle and the glove box will automatically open. Close the glove box after use.

⚠ WARNING

To reduce the risk of injury in an accident or sudden stop, always keep the glove box door closed whilst driving.

⚠ CAUTION

Do not keep food in the glove box for a long time.

Luggage net holder (if equipped)



To keep items from shifting in the cargo area, you can use the 2 holders located in the cargo area to attach the luggage net.

If necessary, Kia recommends to contact an authorised Kia dealer/service partner.

⚠ CAUTION

To prevent damage to the goods or the vehicle, care should be taken when carrying fragile or bulky objects in the luggage compartment.

⚠ WARNING

Avoid eye injury. DO NOT over-stretch the luggage net, ALWAYS keep your face and body out of the luggage net's recoil path. DO NOT use when the strap has visible signs of wear or damage.

Luggage board (if equipped)



You can place a first aid kit, a reflector triangle, tools, etc. in the box for easy access.

Grasp the handle on the top of the cover and lift it.

Increase cargo space (if equipped)



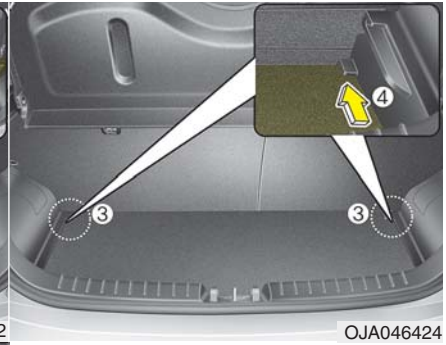



If you want to increase cargo space,

1. Grasp the handle on the top of the cover and lift it.
2. Fold the rear part of the luggage board frontward.
3. Pull the luggage board hinge to the end of sliding slot and it will fall down lower to increase cargo space.
4. Slide it frontward (refer to the above pictures).

INTERIOR FEATURES

Cigarette lighter (if equipped)

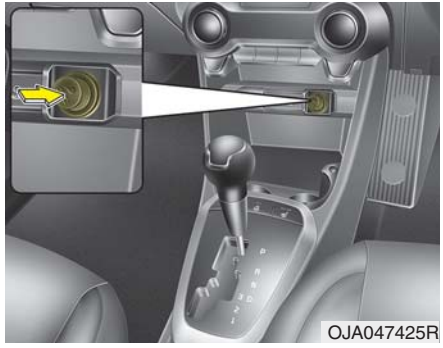
OJA047425R

For the cigarette lighter to work, the ignition switch must be in the ACC position or the ON position.

To use the cigarette lighter, push it all the way into its socket. When the element has heated, the lighter will pop out to the “ready” position.

If it is necessary to replace the cigarette lighter, use only a genuine Kia replacement or its approved equivalent.

⚠ WARNING

- **Do not hold the lighter in after it is already heated because it will overheat.**
- **If the lighter does not pop out within 30 seconds, remove it to prevent overheating.**
- **Do not insert foreign objects into the socket of the cigarette lighter. It may damage the cigarette lighter.**

⚠ CAUTION

Only a genuine Kia lighter should be used in the cigarette lighter socket. The use of plug-in accessories (shavers, hand-held vacuums, and coffee pots, etc.) may damage the socket or cause electrical failure.

Ashtray (if equipped)


OJA047437R

To use the ashtray, open the cover.

To clean or empty the ashtray, pull it out.

Use the ashtray by leaning it to the cup holder right beside.

⚠ WARNING - Ashtray use

- **Do not use the vehicle’s ashtrays as waste receptacles.**
- **Putting lit cigarettes or matches in an ashtray with other combustible materials may cause a fire.**

Cup holder

⚠ WARNING - Hot liquids

- **Do not place uncovered cups of hot liquid in the cup holder whilst the vehicle is in motion. If the hot liquid spills, you could be burned. Such a burn to the driver could lead to loss of control of the vehicle.**
- **To reduce the risk of personal injury in the event of sudden stop or collision, do not place uncovered or unsecured bottles, glasses, cans, etc., in the cup holder whilst the vehicle is in motion.**

⚠ WARNING

Keep cans or bottles out of direct sun light and do not put them in a vehicle that is heated up. It may explode.



OJA047432R

Cups or small beverage cans may be placed in the cup holders.

To use the cup holder, press the button (1).

The half part of the cup holder (2) will appear.

⚠ CAUTION

Be careful not to spill drinks in the cup holder. The cup holder may not work.



OJA047433R

To use the cup holder space as a storage compartment, turn the half part of the cup holder (2) to the direction of the arrow.

✻ NOTICE

- **Keep your drinks sealed whilst driving to prevent spilling your drink. If liquid spills, it may get into the vehicle's electrical/electronic system and damage electrical/electronic parts.**
- **When cleaning spilled liquids, do not dry the cup holder at high temperature. This may damage the cup holder.**

Sunvisor

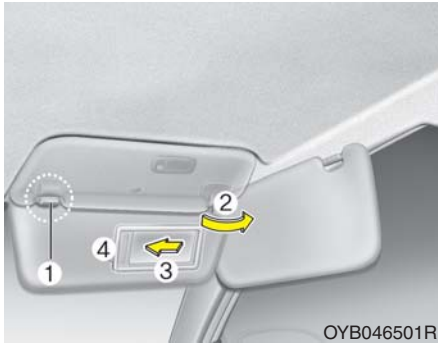

Use the sunvisor to shield direct light through the front or side windows.

To use the sunvisor, pull it downward.

To use the sunvisor for the side window, pull it downward, unsnap it from the bracket (1) and swing it to the side (2).

To use the vanity mirror, pull down the visor and slide the mirror cover (3).

The ticket holder (4) is provided for holding a tollgate ticket. (if equipped)

⚠ WARNING

For your safety, do not obstruct your vision when using the sunvisor.

Seat warmer (if equipped)

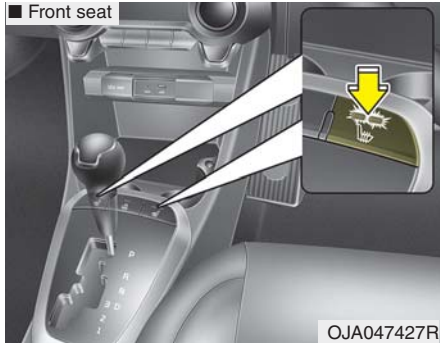

The seat warmer is provided to warm the front seats during cold weather. With the ignition switch in the ON position, push either of the switches to warm the driver's seat or the front passenger's seat.

During mild weather or under conditions where the operation of the seat warmer is not needed, keep the switches in the “OFF” position.

- Each time you press the switch, the temperature setting of the seat will change as follows :

■ Front seat



- The seat warmer defaults to the OFF position whenever the ignition switch is turned on.

✻ NOTICE

With the seat warmer switch in the ON position, the heating system in the seat turns off or on automatically depending on the seat temperature.

⚠ CAUTION

- ***When cleaning the seats, do not use an organic solvent such as paint thinner, benzene, alcohol and petrol. Doing so may damage the surface of the heater or seats.***
- ***To prevent overheating the seat warmer, do not place anything on the seats that insulates against heat, such as blankets, cushions or seat covers whilst the seat warmer is in operation.***
- ***Do not place heavy or sharp objects on seats equipped with seat warmers. Damage to the seat warming components could occur.***
- ***Do not change the seat cover. It may damage the seat warmer or airventilation system.***

⚠ WARNING - Seat warmer burns

Passengers should use extreme caution when using seat warmers due to the possibility of excess heating or burns. The seat warmer may cause burns even at low temperatures, especially if used for long periods of time. In particular, the driver must exercise extreme care for the following types of passengers:

1. **Infants, children, elderly or handicapped persons, or hospital outpatients**
2. **Persons with sensitive skin or those that burn easily**
3. **Fatigued individuals**
4. **Intoxicated individuals**
5. **Individuals taking medication that can cause drowsiness or sleepiness (sleeping pills, cold tablets, etc.)**

Power outlet

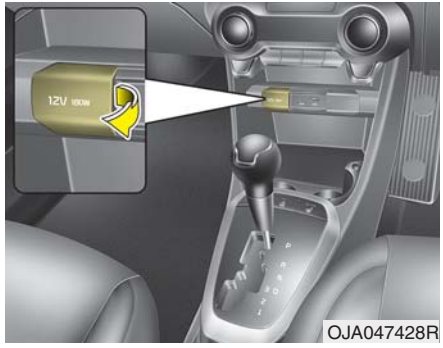

The power outlet is designed to provide power for mobile telephones or other devices designed to operate with vehicle electrical systems. The devices should draw less than 10 amps with the engine running.

⚠ CAUTION

- ***Use the power outlet only when the engine is running and remove the accessory plug after use. Using the accessory plug for prolonged periods of time with the engine off could cause the battery to discharge.***
- ***Only use 12V electric accessories which are less than 10A in electric capacity.***
- ***Adjust the air-conditioner or heater to the lowest operating level when using the power outlet.***
- ***Close the cover when not in use.***
- ***Some electronic devices can cause electronic interference when plugged into a vehicle's power outlet. These devices may cause excessive audio static and malfunctions in other electronic systems or devices used in your vehicle.***

(Continued)

(Continued)

- ***Using electrical products which exceed the limited capacity might cause heating to the power outlet and wiring that could lead to an electrical breakdown.***
- ***Always make sure the electrical part is firmly plugged into the power outlet. Incomplete plugging may cause electrical breakdown.***
- ***Electrical products with a built-in battery might cause current flow, which could lead to malfunction of the electric/electronic device in your vehicle. Only use electrical products which include reverse current prevention.***

⚠ WARNING

Do not put a finger or a foreign element (pin, etc.) into a power outlet and do not touch with a wet hand. You may get an electric shock.

Digital clock (if equipped)

Whenever the battery terminals or related fuses are disconnected, you must reset the time.

When the ignition switch is in the ACC or ON position, the clock buttons operate as follows:

Setup the clock



Hour:

Turn the knob to the left (H), will advance the time displayed by one hour.

Minute:

Turn the knob to the right (M), will advance the time displayed by one minute.

⚠ WARNING

Do not adjust the clock whilst driving. You may lose your steering control and cause an accident that results in severe personal injury or death.

Floor mat anchor(s) (if equipped)



When using a floor mat on the front floor carpet, make sure it attaches to the floor mat anchor(s) in your vehicle. This keeps the floor mat from sliding forward.

⚠ WARNING

The following must be observed when installing ANY floor mat to the vehicle.

- **Ensure that the floor mats are securely attached to the vehicle's floor mat anchor(s) before driving the vehicle.**
- **Do not use ANY floor mat that cannot be firmly attached to the vehicle's floor mat anchors.**
- **Do not stack floor mats on top of one another (e.g. all-weather rubber mat on top of a carpeted floor mat). Only a single floor mat should be installed in each position.**

IMPORTANT - Your vehicle was manufactured with driver's side floor mat anchors that are designed to securely hold the floor mat in place. To avoid any interference with pedal operation, Kia recommends that only the Kia floor mat designed for use in your vehicle be installed.

Shopping bag holder

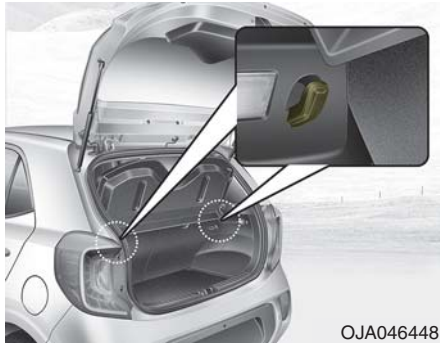
OJA046448

⚠ CAUTION

- ***Do not hang a bag weighing more than 3 kg (7 lbs.). It may cause damage to the shopping bag holder.***
- ***Do not hang the frail objects when you drive rough road, the objects may be damaged.***

Clothes hanger (if equipped)

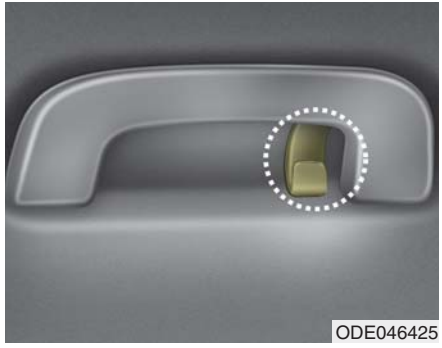
ODE046425

To use the hanger, pull down the upper portion of hanger.

⚠ CAUTION

Do not hang heavy clothes, since those may damage the hook.

⚠ WARNING

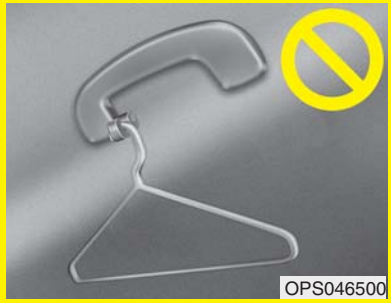
OPS046500

Do not hang other objects such as hangers or hard objects except clothes. Also, do not put heavy, sharp or breakable objects in the clothe pockets. In an accident or when the curtain air bag is inflated, it may cause vehicle damage or personal injury.

Audio system

Audio System 5-2
- **Antenna 5-2**
- **AUX, USB port 5-3**
- **How vehicle audio works 5-3**

Audio (Without Touch Screen) 5-7
- **Feature of Your Audio. 5-8**
- **Radio. 5-17**
- **Media 5-18**
- **Phone 5-27**
- **Setup 5-36**

Declaration of Conformity 5-39
- **CE for EU. 5-39**
- **NCC for Taiwan. 5-40**
- **ANATEL for Brazil 5-41**
- **IFETEL 5-42**

AUDIO SYSTEM

✻ NOTICE

If you install an aftermarket HID head lamp, your vehicle's audio and electronic device may malfunction.

Antenna

Roof antenna

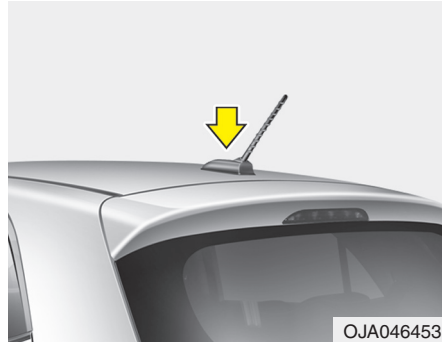

Your car uses a roof antenna to receive both AM and FM broadcast signals. This antenna is a removable type.

To remove the antenna, turn it counterclockwise. To install the antenna, turn it clockwise.

⚠ CAUTION

- ***Before entering a place with a low height clearance or a car wash, remove surely the antenna by rotating it counter-clockwise. If not, the antenna may be damaged.***
- ***When reinstalling your antenna, it is important that it is fully tightened and adjusted to the upright position to ensure proper reception. But it could be folded or removed when parking the vehicle or when loading cargo on the roof rack.***
- ***When cargo is loaded on the roof rack, do not place the cargo near the antenna pole to ensure proper reception.***

AUX, USB port (if equipped)

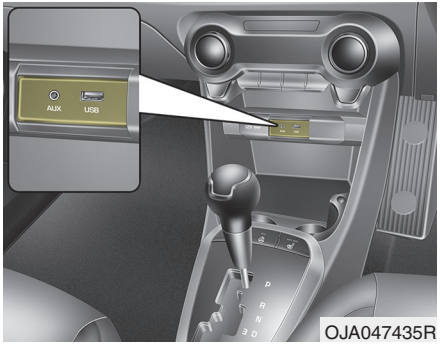

You can use the AUX port to connect audio devices and the USB port to plug in a USB device or iPod®.

✻ NOTICE

When using a portable audio device connected to the power outlet, noise may occur during playback. If this happens, use the power source of the portable audio device.

How vehicle audio works

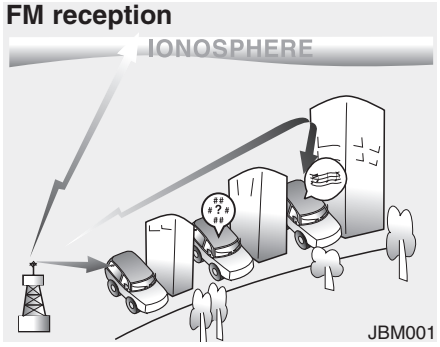

AM and FM radio signals are broadcast from transmitter towers located around your city. They are intercepted by the radio antenna on your vehicle. This signal is then received by the radio and sent to your vehicle speakers.

When a strong radio signal has reached your vehicle, the precise engineering of your audio system ensures the best possible quality reproduction. However, in some cases the signal coming to your vehicle may not be strong and clear.

This can be due to factors, such as the distance from the radio station, closeness of other strong radio stations or the presence of buildings, bridges or other large obstructions in the area.

AM reception

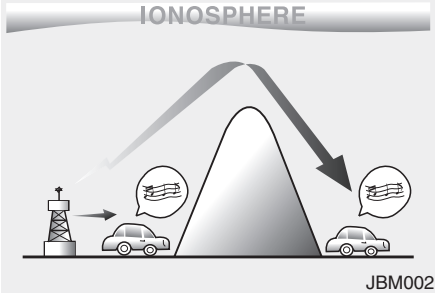

AM broadcasts can be received at greater distances than FM broadcasts. This is because AM radio waves are transmitted at low frequencies. These long, low frequency radio waves can follow the curvature of the earth rather than travelling straight out into the atmosphere. In addition, they curve around obstructions so that they can provide better signal coverage.

FM radio station

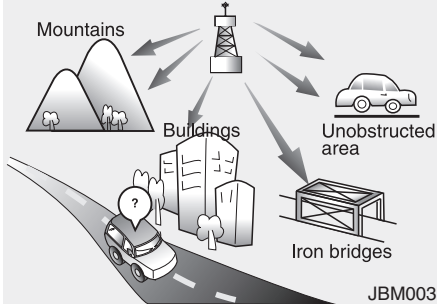

FM broadcasts are transmitted at high frequencies and do not bend to follow the earth's surface. Because of this, FM broadcasts generally begin to fade at short distances from the station. Also, FM signals are easily affected by buildings, mountains, or other obstructions. These can result in certain listening conditions which might lead you to believe a problem exists with your radio. The following conditions are normal and do not indicate radio trouble:

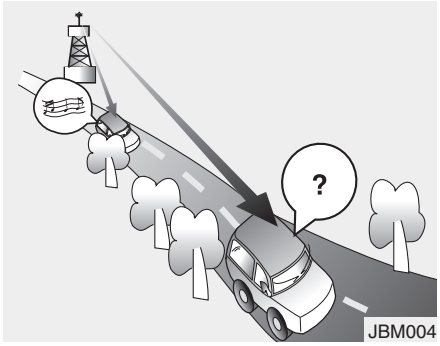

- Fading - As your vehicle moves away from the radio station, the signal will weaken and sound will begin to fade. When this occurs, we suggest that you select another stronger station.
- Flutter/Static - Weak FM signals or large obstructions between the transmitter and your radio can disturb the signal causing static or fluttering noises to occur. Reducing the treble level may lessen this effect until the disturbance clears.

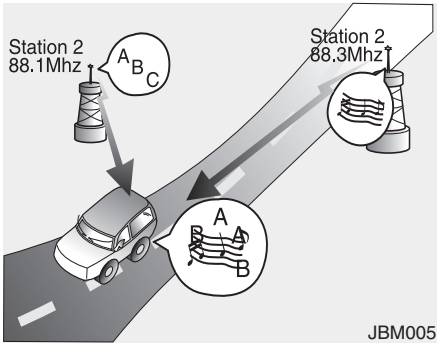

- Station Swapping - As a FM signal weakens, another more powerful signal near the same frequency may begin to play. This is because your radio is designed to lock onto the clearest signal. If this occurs, select another station with a stronger signal.
- Multi-Path Cancellation - Radio signals being received from several directions can cause distortion or fluttering. This can be caused by a direct and reflected signal from the same station, or by signals from two stations with close frequencies. If this occurs, select another station until the condition has passed.

Using a mobile phone or a two-way radio

When a mobile phone is used inside the vehicle, noise may be produced from the audio system. This does not mean that something is wrong with the audio equipment. In such a case, use the mobile phone at a place as far as possible from the audio equipment.

⚠ CAUTION

When using a communication system such as a mobile phone or a radio set inside the vehicle, a separate external antenna must be fitted. When a mobile phone or a radio set is used with an internal antenna alone, it may interfere with the vehicle's electrical system and adversely affect safe operation of the vehicle.

⚠ WARNING

Do not use a mobile phone whilst driving. Stop at a safe location to use a mobile phone.

iPod®

iPod® is a trademark of Apple Inc.

Bluetooth® Wireless Technology

The Bluetooth® word mark and logos are registered trademarks owned by Bluetooth SIG, Inc. and any use of such marks by Kia is under license. Other trademarks and trade names are those of their respective owners.



AUDIO (Without Touch Screen)

■ Type A



■ Type B



G6N3G0000EE/G6N3G0001EE

Feature of Your Audio

Head Unit

■ Type A



■ Type B



✻ The actual features in the vehicle may differ from the illustration.

(1) **RADIO**

- Plays Radio(FM/AM) mode.
- Each time the button is pressed, the radio mode popup will be displayed or closed.
- The radio mode popup will not be displayed when **[SETUP/CLOCK]** button ▶ [Display] ▶ [Mode popup] is turned [Off].

(2) **MEDIA**

- Plays USB(iPod®), AUX mode.
- Each time the button is pressed, the media mode popup will be displayed or closed.
- The media mode popup will not be displayed when **[SETUP/CLOCK]** button ▶ [Display] ▶ [Mode popup] is turned [Off].

(3) **SETUP/CLOCK**

When pressed quickly

- Moves to Setup screen.

When pressed and held

- Moves to the Time Settings.

(4) **SEEK/TRACK**

When pressed quickly

- Radio mode: Searches broadcast frequencies.
- Media mode: Changes the track, file or title. (except AUX)

When pressed and held

- Radio mode: Frequency is controlled by 1 step quickly. When the button is released after pressing and holding, searches broadcast frequencies.
- Media mode: Rewinds or fast-forwards the song. (except AUX)

(5) **POWER/VOL** knob

- Power knob: Turns power On/Off by pressing the knob.
- Volume knob: Sets volume by turning the knob left/right.

■ Type A



■ Type B



(6) **MENU**

- Displays menus for the current mode.

(7) **DISP**

- Turns off the screen.
- Each time the button is pressed, it sets the Screen Off ➟ On ➟ Off.

(8) **BACK**

- Moves to previous screen.

(9) **FOLDER**

- USB mode: Searches folders.

(10) **TUNE** knob

- Radio mode: Changes frequency by turning the knob left/right.
- Media mode: Searches songs(files) by turning the knob left/right.



(11) **[1] ~ [6]** (Preset)

When pressed quickly

- Radio mode: Receives saved frequencies(channels).
- Media mode(USB)
  - **[1 RPT]** button: Repeat/Repeat Folder
  - **[2 SHFL]** button: Shuffle Folder/ Shuffle
- Media mode(iPod®)
  - **[1 RPT]** button: Repeat
  - **[2 SHFL]** button: Shuffle
- In case of Menu popup, the number menu is selected.

When pressed and held

- Radio mode: Saves frequencies (channels).

■ Type C



■ Type D



(With *Bluetooth®* Wireless Technology)

G6N3G0002EE/G6N3G0003EE

Feature of Your Audio

Head Unit

■ Type C



■ Type D



✻ The actual features in the vehicle may differ from the illustration.

(1) **RADIO**

- Plays Radio(FM/AM) mode.
- Each time the button is pressed, the radio mode popup will be displayed or closed.
- The radio mode popup will not be displayed when **[SETUP/CLOCK]** button ▶ [Display] ▶ [Mode popup] is turned [Off].

(2) **MEDIA**

- Plays USB(iPod®), BT Audio, AUX mode.
- Each time the button is pressed, the media mode popup will be displayed or closed.
- The media mode popup will not be displayed when **[SETUP/CLOCK]** button ▶ [Display] ▶ [Mode popup] is turned [Off].

(3) **PHONE**

- Moves to Phone screen.
- If Bluetooth® is not connected, displays Bluetooth® Pair/Connection screen.

(4) **SEEK/TRACK**

When pressed quickly

- Radio mode: Searches broadcast frequencies.
- Media mode: Changes the track, file or title. (except AUX)

When pressed and held

- Radio mode: Frequency is controlled by 1 step quickly. When the button is released after pressing and holding, searches broadcast frequencies.
- Media mode: Rewinds or fast-forwards the song. (except BT Audio, AUX)

(5) **POWER/VOL** knob

- Power knob: Turns power On/Off by pressing the knob.
- Volume knob: Sets volume by turning the knob left/right.

■ Type C



■ Type D



(6) **MENU**

- Displays menus for the current mode.

(7) **SETUP/CLOCK**

When pressed quickly

- Moves to Setup screen.

When pressed and held

- Moves to the Time Settings.

(8) **BACK**

- Moves to previous screen.

(9) **FOLDER**

- USB mode: Searches folders.

(10) **TUNE** knob

- Radio mode: Changes frequency by turning the knob left/right.
- Media mode: Searches songs(files) by turning the knob left/right.

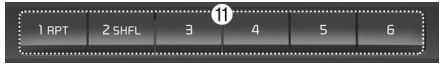

(11) **[1] ~ [6]** (Preset)

When pressed quickly

- Radio mode: Receives saved frequencies(channels).
- Media mode(USB)
  - **[1 RPT]** button: Repeat/Repeat Folder
  - **[2 SHFL]** button: Shuffle Folder/ Shuffle
- Media mode(iPod®)
  - **[1 RPT]** button: Repeat
  - **[2 SHFL]** button: Shuffle
- In case of Menu popup, the number menu is selected.

When pressed and held

- Radio mode: Saves frequencies (channels).

Steering wheel remote control

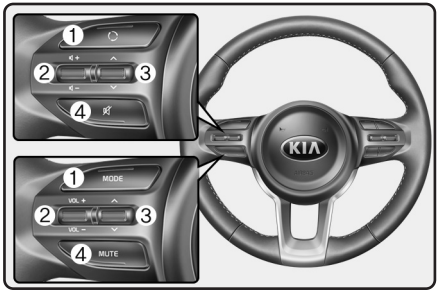

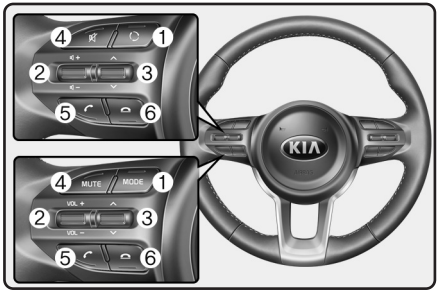

(Bluetooth® equipped model)

❊ The actual features in the vehicle may differ from the illustration.

(1) **MODE**

- Each time this is pressed, the mode is changed sequentially.
- If the media is not connected, the corresponding modes will be disabled.
- Press and hold to turn the Audio system on/off*.
- When power is off, press button to turn power back on*.

* if equipped

(2) **VOLUME**

- Adjust the volume.

(3) **SEEK/TRACK**

- When pressed quickly
  - Radio mode: Searches broadcast frequencies saved to Presets.
  - Media mode: Changes track, file or title. (except AUX)
- When pressed and held
  - Radio mode: Frequency is controlled by 1 step quickly. When the button is released after pressing and holding, searches broadcast frequencies.
  - Media mode: Rewinds or fast-forwards the song. (except BT Audio*, AUX)

* if equipped

(4) **MUTE**

- Mutes the audio volume.
- When a call is active, mic volume is muted. (if equipped)

(5) **CALL** (if equipped)

- When pressed quickly
  - Displays the last dialed number.
  - When pressed in the incoming call screen, answers the call.
  - When pressed during call waiting, switches to waiting call.
- When pressed and held
  - Calls the last dialed number.
  - When pressed during a Bluetooth® Handsfree call, switches call back to Bluetooth® device(private mode).
  - When pressed whilst calling on the Bluetooth® device, switches call back to Bluetooth® Handsfree.
  - If Bluetooth® is not connected, displays Bluetooth® Pair/Connection screen.

(6) **END** (if equipped)

- When pressed during a call, ends the phone call.
- When pressed in the incoming call screen, rejects the call.

⚠ WARNING
- Audio System Safety Warnings

- **Do not stare at the screen whilst driving. Staring at the screen for prolonged periods of time could lead to traffic accidents.**
- **Do not disassemble, assemble, or modify the audio system. Such acts could result in accidents, fire, or electric shock.**
- **Using the phone whilst driving may lead to a lack of attention of traffic conditions and increase the likelihood of accidents. Use the phone feature after parking the vehicle.**
- **Exercise caution not to spill water or introduce foreign objects into the device. Such acts could lead to smoke, fire, or product malfunction.**

(Continued)

(Continued)

- **Please refrain from use if the screen is blank or no sound can be heard as these signs may indicate product malfunction. Continued use in such conditions could lead to accidents (fires, electric shock) or product malfunctions.**
- **Do not touch the antenna during thunder or lightening as such acts may lead to lightning induced electric shock.**
- **Do not stop or park in parking-restricted areas to operate the product. Such acts could lead to traffic accidents.**
- **Use the system with the vehicle ignition turned on. Prolonged use with the ignition turned off could result in battery discharge.**

⚠ WARNING
- Distracted Driving

Driving whilst distracted can result in a loss of vehicle control that may lead to an accident, severe personal injury, and death. The driver's primary responsibility is in the safe and legal operation of a vehicle, and use of any handheld devices, other equipment, or vehicle systems which take the driver's eyes, attention and focus away from the safe operation of a vehicle or which are not permissible by law should never be used during operation of the vehicle.

⚠ CAUTION

- *Operating the device whilst driving could lead to accidents due to a lack of attention to external surroundings. First park the vehicle before operating the device.*
- *Adjust the volume to levels that allow the driver to hear sounds from outside of the vehicle. Driving in a state where external sounds cannot be heard may lead to accidents.*
- *Pay attention to the volume setting when turning the device on. A sudden output of extreme volume upon turning the device on could lead to hearing impairment. (Adjust the volume to a suitable levels before turning off the device.)*

(Continued)

(Continued)

- *If you want to change the position of device installation, please inquire with your place of purchase or service maintenance centre. Technical expertise is required to install or disassemble the device.*
- *Turn on the car ignition before using this device. Do not operate the audio system for long periods of time with the ignition turned off as such operations may lead to battery discharge.*
- *Do not subject the device to severe shock or impact. Direct pressure onto the front side of the monitor may cause damage to the LCD or touch screen.*

(Continued)

(Continued)

- *When cleaning the device, make sure to turn off the device and use a dry and smooth cloth. Never use tough materials, chemical cloths, or solvents (alcohol, benzene, thinners, etc.). As such materials may damage the device panel or cause colour/quality deterioration.*
- *Do not place beverages close to the audio system. Spilling beverages may lead to system malfunction.*
- *In case of product malfunction, please contact your place of purchase or After Service centre.*
- *Placing the audio system within an electromagnetic environment may result in noise interference.*
- *Prevent caustic solutions such as perfume and cosmetic oil from contacting the dashboard because they may cause damage or discoloration.*

Radio

Radio Mode

Change Mode: [RADIO] button

- Plays Radio mode. Each time the button is pressed, the radio mode popup will be displayed or closed.
- The radio mode popup will not be displayed when **[SETUP/CLOCK]** button ▶ [Display] ▶ [Mode popup] is turned [Off].

Search Frequency: [SEEK/TRACK] button

- Searches the previous/next broadcast frequencies.
- Pressing the button: Searches broadcast frequencies.
- Frequency is controlled by 1 step quickly. When the button is released after pressing and holding, searches broadcast frequencies.

Change Frequency: TUNE knob

Changes frequency by turning the knob left/right. You can seek available frequencies manually.

Saved Frequency: [1] ~ [6] (Preset) buttons

- Pressing the button: Plays the frequency saved in the corresponding button.
- Pressing and holding the button: Saves the currently playing broadcast to the selected button and sound a BEEP.

FM/AM (with RDS)

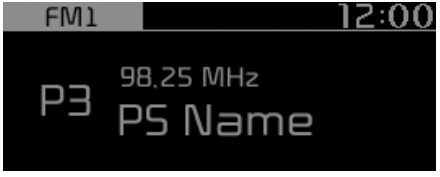

FM/AM (without RDS)



Displays Menu Popup when pressing the **[MENU]** button.

Traffic announcement (for RDS model)

TA(Traffic announcement) feature On/Off.

Presets (for RDS model)

Displays saved presets.

Autostore

- Saves broadcasts with superior reception to **[1] ~ [6]** buttons.
- If no frequencies are received, then the most recently received frequency will be broadcast.

Scan

The broadcast frequency increases and previews each broadcast for 5 seconds each. After scanning all frequencies, returns and plays the current broadcast frequency.

Sound Settings

Moves to Sound Settings.

Media

✻ NOTICE - Using MP3

Supported audio formats

Compressed audio formats	MPEG1 Audio Layer3
	MPEG2 Audio Layer3
	MPEG2.5 Audio Layer3
	Windows Media Audio Ver 7.X & 8.X

✻ NOTICE

File formats that do not comply with the above formats may not be properly recognized or play without properly displaying file names or other information.

Support for Compressed Files

1. Supported Bitrates (Kbps)

BIT RATE(kbps)	MPEG1 Layer3	MPEG2 Layer3	MPEG2.5 Layer3	WMA High Range
	32	8	8	48
	40	16	16	64
	48	24	24	80
	56	32	32	96
	64	40	40	128
	80	48	48	160
	96	56	56	192
	112	64	64	
	128	80	80	
	160	96	96	
	192	112	112	
	224	128	128	
	256	144	144	
	320	160	160	

2. Sampling Frequencies (Hz)

MPEG1	MPEG2	MPEG2.5	WMA
44100	22050	11025	32000
48000	24000	12000	44100
3000	16000	8000	48000

- For MP3/WMA compression files, differences in sound quality will occur depending on the bitrate. (Higher sound quality can be experienced with higher bitrates.)
- This device only recognizes files with MP3/WMA extensions. Other file extensions may not be properly recognized.

3. Maximum number of recognized folders and files

- Folder: 1,000 folders for USB
- File: 5,000 files for USB
- There are no limitations to the number of recognized folder levels

4. Text Display (Based on Unicode)

- Filenames: Maximum 40 English characters
- Foldernames: Maximum 40 English characters

✻ NOTICE

Using the scroll feature allows you to see the entire name of files with names that are too long to be displayed at once. (if equipped)

Language Support (Unicode Support)

- Korean: 2,604 characters
- English: 94 characters
- Common Chinese characters: 4,888 characters
- Special symbols: 986 characters

✻ NOTICE

Japanese/Simplified Chinese characters are not supported.

✻ NOTICE - Using the USB Devices

- **Connect the USB device after turning on the engine. The USB device may become damaged if it is already connected when the ignition is turned on. The USB device may not operate properly if the car ignition is turned on or off with the USB device connected.**
- **Be careful for static electricity when connecting/disconnecting USB devices.**
- **Encoded MP3 Players will not be recognized when connected as an external device.**
- **When connecting an external USB device, the vehicle's audio system may not recognize the USB depending on what firmware is used by USB device or what files are on the USB.**
- **Only products formatted with byte/sectors under 64Kbyte will be recognized.**
- **This device recognizes USB devices formatted in FAT 12/16/32 file formats. This device does not recognize files in NTFS file format.**

(Continued)

(Continued)

- **Some USB devices may not be supported due to compatibility issues.**
- **Avoid contact between the USB connector and bodily parts or foreign objects.**
- **Repeated connecting/disconnecting of USB devices within short periods of time may result in product malfunction.**
- **A strange noise may occur when disconnecting the USB.**
- **Make sure to connect/disconnect external USB devices with the audio power turned off.**
- **The amount of time required to recognize the USB device may differ depending on the type, size or file formats stored on the USB. Such differences in time are not indications of malfunctions.**
- **The vehicle audio system only supports USB devices designed to play music files.**
- **USB images and videos are not supported.**

(Continued)

(Continued)

- **Do not use the USB I/F to charge batteries or USB accessories that generate heat. Doing so may lead to worsened performance or damage to the audio system.**
- **The audio system may not recognize the USB device if separately purchased USB hubs and extension cables are being used. Connect the USB device directly with the USB port of the vehicle.**
- **When using mass storage USB devices with separate logical drives, only files saved to the root drive can be played.**
- **Files may not properly operate if application programs are installed on the USBs.**
- **The audio system may not operate normally if MP3 Players, mobile phones, digital cameras, or other electronic devices (USB devices not recognized as portable disk drives) are connected with the audio system.**

(Continued)

(Continued)

- **Charging through the USB may not work for some mobile devices.**
- **The device may not support normal operation when using an atypical USB memory device (miniature, keychain, etc.). For best results, use a typical USB device that has a metal case.**
- **The device may not support normal operation when using formats such as HDD Type, CF, or SD Memory.**
- **The device will not support files locked by DRM (Digital Rights Management.).**
- **USB memory sticks used by connecting an Adaptor (SD Type or CF Type) may not be properly recognized.**
- **The device may not operate properly when using USB HDDs or USBs subject to connection failures caused by vehicle vibrations. (e.g. i-stick type)**

(Continued)

(Continued)



- **Avoid use of USB memory products that can also be used as key chains or mobile phone accessories. Use of such products may cause damage to the USB jack.**
- **Connecting an MP3 device or phone through various channels, such as AUX/BT or Audio/USB mode may result in pop noises or abnormal operation.**
- **Use USB 2.0 devices for better compatibility. Maximum device size supported is 32 GB.**

✻ NOTICE - Using an iPod®

- iPod® is a registered trademark of Apple Inc.
- In order to use the iPod® with your vehicle's audio system, you must use a dedicated iPod® cable. (the cable that is supplied when purchasing iPod®/iPhone® products)
- If the iPod® is connected to the vehicle whilst it is playing, a high pitch sound could occur for approximately 1-2 seconds immediately after connecting. If possible, connect the iPod® to the vehicle with the iPod® stopped/paused.
- When the vehicle ignition is set to ACC or ON, connecting the iPod® through the iPod® cable will charge the iPod® through the car audio system.
- When connecting with the iPod® cable, make sure to fully insert the jack to prevent communication interference.

(Continued)

(Continued)

- When the EQ features of an external device, such as the iPod®, and the audio system are both active, EQ effects could overlap and cause sound deterioration and distortion. Whenever possible, turn off the EQ feature within the external device when it is connected to the audio system.
- Noise may occur when an iPod® or AUX device is connected. When such devices are not being used, disconnect the device for storage.
- When the iPod® or AUX device power is connected to the power jack, playing the external device may result in noise. In such cases, disconnect the power connection before use.
- Skipping or improper operation may occur depending on the characteristics of your iPod®/iPhone® device.

(Continued)

(Continued)

- If your iPhone® is connected to both the Bluetooth® and USB, the sound may not be properly played. In your iPhone®, select the Dock connector or Bluetooth® to change the sound output (source).
- iPod® mode cannot be operated when the iPod® cannot be recognized due to the playing of versions that do not support communication protocols, cases of iPod® abnormalities and defects.
- For fifth generation iPod® Nano devices, the iPod® may not be recognized when the battery level is low. Please charge the iPod® for use.
- The search/play orders shown within the iPod® device may differ from the orders shown within the audio system.
- If the iPod® malfunctions due to an iPod® device defect, reset the iPod® and try again. (To learn more, refer to your iPod® manual)

(Continued)

(Continued)

- **Some iPod®s may not sync with the System depending on the version. If the Media is removed before the Media is recognized, then the system may not properly restore the previously operated mode. (iPad® charging is not supported.)**
- **Use an iPod® cable shorter than 1 meter in length such as the one originally supplied with a new iPod®, longer cables may lead to the audio system not recognizing the iPod®.**

✻ NOTICE - Using Bluetooth® (BT) Audio (if equipped)

- **Bluetooth® Audio Mode can be used only when a Bluetooth® phone has been connected.**
- **Bluetooth® Audio Mode will not be available when connecting mobile phones that do not support this feature.**
- **If a Bluetooth® Phone is being used to play music and receives an incoming or outgoing phone call, then the music will stop.**
- **Moving the Track up/down whilst playing Bluetooth® audio mode may result in pop noises with some mobile phones.**
- **Bluetooth® streaming audio may not be supported in some mobile phones.**

(Continued)

(Continued)

- **When returning to Bluetooth® Audio mode after ending a call, the mode may not automatically restart in some mobile phones.**
- **Receiving an incoming call or making an outgoing call whilst playing Bluetooth® Audio may result in audio interference.**

Media Mode

Change Mode: [MEDIA] button

- Each time the button is pressed, the media mode popup will be displayed or closed.

  You can select a menu in the mode popup by using the **[1] ~ [6]** (Preset) buttons or **TUNE** knob.
- The media mode popup will not be displayed when **[SETUP/CLOCK]** button ▶ [Display] ▶ [Mode popup] is turned [Off].
- If media device(USB, AUX) is connected, then it will automatically operate. Once it is disconnected, the previous mode will be restored.
- The Audio/BT Audio*/AUX volume can also be controlled.

* if equipped

Repeat: [1 RPT] button

Repeats the current song or repeats all songs within the current folder.

- iPod® mode: Repeat Song ➟ Repeat Off
- USB mode: Repeat Song ➟ Repeat Folder ➟ Off

Shuffle: [2 SHFL] button

Plays all songs within the current folder(category) or play all songs in random order.

- iPod® mode: Shuffle All ➟ Shuffle Off
- USB mode: Shuffle Folder ➟ Shuffle All ➟ Off

Change Song/File: [SEEK/TRACK] button

[∨ SEEK/TRACK] button

- Pressing the button: Plays the current song from the beginning.
- If the **[∨ SEEK/TRACK]** button is pressed again within 2 seconds, the previous song is played.
- Pressing and holding the button: Rewinds the song.

[SEEK/TRACK ∧] button

- Pressing the button: Plays the next song.
- Pressing and holding the button: Fast-forwards the song.

✻ NOTICE

- **AUX and BT Audio* don't support Rewind/Fast-forward feature.**
- **Changing the previous/next song may not be supported in some Bluetooth® devices.**

*** if equipped**

Search Song: TUNE knob

- Turning **TUNE** knob: Searches for songs(files).
- Pressing **TUNE** knob: Plays selected song(file).

✻ NOTICE

- **BT Audio*, iPod® and AUX don't support playlist feature.**
- **Whilst BT Audio* is playing, pressing the TUNE knob plays and pauses the current song.**

*** if equipped**

Search Folder: [FOLDER] button

Searches the previous/next folder. (USB)

✻ NOTICE

If a folder is selected by pressing the TUNE knob, the first file within the selected folder will be played.

USB



Displays Menu Popup when pressing the **[MENU]** button.

List

Moves to the list screen.

Repeat

Repeats the current song. Press it again to turn off.

Repeat Folder

Repeats songs within the current folder. Press it again to turn off.

Shuffle Folder

Randomly plays songs within the current folder. Press it again to turn off.

Shuffle

Randomly plays all songs. Press it again to turn off.

Information

Displays information of the current song.

Sound Settings

Moves to Sound Settings.

iPod®



Displays Menu Popup when pressing the **[MENU]** button.

List

Moves to the list screen.

Repeat

Repeats the current song. Press it again to turn off.

Shuffle

Plays all songs within the currently playing category in random order. Press it again to turn off.

Information

Displays information of the current song.

Sound Settings

Moves to Sound Settings.

Bluetooth® (BT) Audio (if equipped)

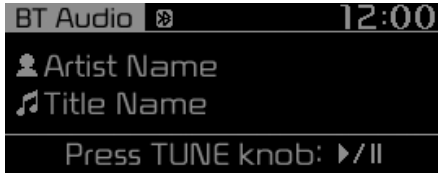

Displays Menu Popup when pressing the **[MENU]** button.

Sound Settings

Moves to Sound Settings.

✻ NOTICE

- **Audio may not automatically start playing in some Bluetooth® devices. If the music in the Bluetooth® device is not played after changing to audio streaming mode, press the TUNE knob. Check if the music is playing in the Bluetooth® device after changing to audio streaming mode.**
- **Audio streaming may not be supported for some Bluetooth® devices.**
- **If Bluetooth® device is disconnected, BT Audio is ended.**
- **Bluetooth® connection is required to use BT Audio. Refer to the Bluetooth® manual for more information.**

AUX

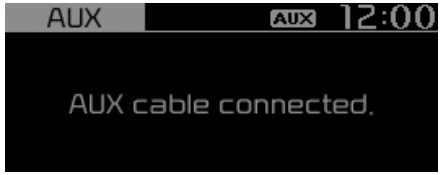

Displays Menu Popup when pressing the **[MENU]** button.

Sound Settings

Moves to Sound Settings.

✻ NOTICE

- **AUX mode can be used only when an external audio player has been connected.**
- **If only a cable is connected to the AUX without an external device, the mode will be changed to AUX, but noise may occur. When an external device is not being used, remove the connector jack.**
- **When the external device power is connected to the power jack, playing the external device may output noise. In such cases, disconnect the power connection before use.**

Phone (if equipped)

✻ NOTICE - Using Bluetooth® (BT) Phone

What is Bluetooth®?

- Bluetooth® refers to a short-distance wireless networking technology which uses a 2.45GHz frequency to connect various devices within a certain distance.
- Supported within PCs, external devices, Bluetooth® phones, PDAs, various electronic devices, and automotive environments, Bluetooth® to be transmitted at high speeds without having to use a connector cable.
- Bluetooth® Handsfree refers to a device which allows the user to conveniently make phone calls with Bluetooth® devices through the Multimedia system.
- The Bluetooth® Handsfree feature may not be supported in some Bluetooth® devices. For Bluetooth® supporting devices details and compatibility, visit http://kiaeurope.nextgen-technology.net

⚠ WARNING - Distracted Driving

- **Focus on the road whilst driving. The driver's primary responsibility is in the safe and legal operation of the vehicle. Drivers should not use any hand held devices or other equipment or vehicle systems that distract the driver during vehicle operation.**
- **Do not stare at the multimedia screen for long periods of time whilst driving. Staring at the screen for prolonged periods of time can lead to traffic accidents and can result in personal injuries.**
- **Pairing Bluetooth® devices and use of other Bluetooth® features are not supported when the vehicle is in motion. For safety, please first park your vehicle.**

⚠ CAUTION - For Safe Driving

- ***Bluetooth® is a feature that enables drivers to make handsfree calls. Connecting the head unit with a Bluetooth® phone allows the user to conveniently make calls, receive calls, and manage the phonebook. Before using Bluetooth®, carefully read the contents of this user's manual.***
- ***Excessive use or operations whilst driving may lead to negligent driving practices and be the cause of accidents. Do not operate the device excessively whilst driving.***
- ***Viewing the screen for prolonged periods of time is dangerous and may lead to accidents. When driving, view the screen only for short periods***

⚠ **CAUTION**
- For Connecting a Bluetooth® Phone

- ***Before connecting the head unit with the Bluetooth® device, check to see that the mobile device supports Bluetooth® features.***
- ***Even if the mobile device supports Bluetooth®, the device will not be found during device searches if the device has been set to hidden state or the Bluetooth® power is turned off. Disable the hidden state or turn on the Bluetooth® power prior to searching/connecting with the head unit.***

(Continued)

(Continued)

- ***If a Bluetooth® device becomes disconnected due to being out of communication range, turning the device OFF, or a Bluetooth® communication error, corresponding Bluetooth® devices are automatically searched and reconnected.***
- ***If you do not want automatic connection with your Bluetooth® device, turn the Bluetooth® feature off in the Bluetooth® device.***
- ***Only one Bluetooth® device can be connected at a time.***
- ***Bluetooth® connection may become intermittently disconnected in some Bluetooth® devices. Follow these steps to try again.***

(Continued)

(Continued)

1. ***Turn the Bluetooth® function within the Bluetooth® device OFF/ON and try again.***
2. ***Turn the Bluetooth® device power OFF/ON and try again.***
3. ***Completely remove the Bluetooth® device battery, reboot, and then again.***
4. ***Reboot the Multimedia System and try again.***
5. ***Delete all paired devices from both of Bluetooth® device and Head Unit sides and then try again.***

⚠ CAUTION
- Upon Using Bluetooth® Phone

- ***If the Bluetooth® device is not connected, it is not possible to enter Phone mode. After connecting your Bluetooth® device to your car, use the Bluetooth® features.***
- ***You will not be able to use the handsfree feature when your phone is outside of the mobile service area (e.g. in a tunnel, in a underground, in a mountainous area, etc.).***
- ***If the mobile phone signal is poor or the vehicles interior noise is too loud, it may be difficult to hear the other person's voice during a call.***
- ***Do not place the Bluetooth® device near or inside metallic objects, otherwise communications with Bluetooth® system or mobile service stations can be disturbed.***

(Continued)

(Continued)

- ***Placing the audio system within an electromagnetic environment may result in noise interference.***
- ***Some Bluetooth® devices may cause interference noise or malfunction to audio system. In this case, store the device in a different location may resolve the condition.***
- ***Whilst a device is connected through Bluetooth®, your device may discharge quicker than usual for additional Bluetooth®-related operations.***
- ***The handsfree call volume and quality may differ depending on the Bluetooth® device.***

(Continued)

(Continued)

- ***If Connection Priority is set upon vehicle ignition (IGN/ACC ON), the Bluetooth® device will be automatically connected. Even if you are outside, the Bluetooth® device will be automatically connected once you are in the vicinity of the vehicle. If you do not want to automatically connect your Bluetooth® device, turn off the Bluetooth® feature in your Bluetooth® device.***
- ***In some Bluetooth® devices, starting the ignition whilst talking through Bluetooth® enabled handsfree call will result in the call becoming disconnected due to car handsfree call transfer. If you use your phone outside the vehicle, turn off the Bluetooth® feature in your phone.***

Bluetooth® Connection

Before you can use the Bluetooth® feature, you must first pair/connect your Bluetooth® device to your car.

Pairing a new device

- Press the **[PHONE]** button in the head unit or **[CALL]** button in the steering wheel remote control.
- Press the **[SETUP/CLOCK]** button ▶ Select [Phone] ▶ Select [Add new device].

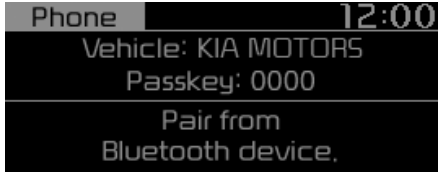

In your Bluetooth® device,

1. Pair your car after your Bluetooth® device detects the Bluetooth® device.
2. Enter the passkey(0000) or accept the authorization popup.
3. Connect Bluetooth®.

✻ NOTICE

- **Up to 5 Bluetooth® devices can be paired.**
- **The default passkey is 0000.**
- **During a Bluetooth® device connection, another device cannot be paired.**
- **The vehicle name above is an example. Check the actual information on the product.**
- **Pairing and connecting a Bluetooth® enabled Bluetooth® device will work only when the Bluetooth® option within your Bluetooth® device has been turned on. (Methods of turning on the Bluetooth® enabled feature may differ depending on the Bluetooth® device.)**

(Continued)

(Continued)

- **After pairing is complete, a contacts download request is sent to the Bluetooth® device. Some Bluetooth® devices may require confirmation upon receiving a download request. Ensure your Bluetooth® device accepts the connection. Refer to your phone's user manual for additional information regarding phone pairing and connections.**

Connecting Bluetooth® devices

Press the **[PHONE]** button in the head unit or **[CALL]** button in the steering wheel remote control ▶ Select the name of the device to connect ▶ Connect Bluetooth®.

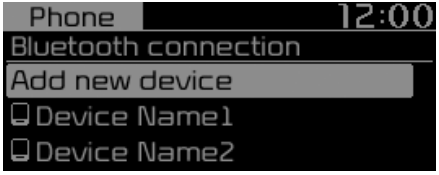

✻ NOTICE

- **Only one Bluetooth® device can be connected at a time.**
- **Bluetooth® features supported within the vehicle are as follows. Some features may not be supported depending on your Bluetooth® device.**
  - **Outgoing/Incoming Handsfree calls**
  - **Operations during a call: Switch to Private, Switch to call waiting, Microphone on/off**
  - **Downloading Call history**
  - **Downloading Contacts**
  - **Bluetooth® device Auto Connection**
  - **Bluetooth® Audio streaming**

Bluetooth® Phone

Bluetooth® Phone

Press the **[PHONE]** button.

Displays Phone Menu screen. The connected device name is displayed in the top of the display.

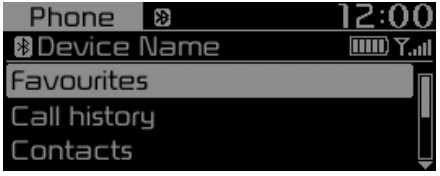

- : Call signal strength indicator
- : Battery level of the Bluetooth® devices connected

Favourites(Favorites)

Press the **[PHONE]** button ▶ Select [Favourites(Favorites)].

Lists the phone numbers saved as favourites. Select from the list to dial the number.



Displays Menu Popup when pressing the **[MENU]** button.

- Add new favourites(Add New Favorites): Adds a phone number to favourites.
- Delete items: Deletes numbers that you select from favourites.
- Delete all: Deletes all of the numbers from favourites.

✻ NOTICE

- **Up to 20 favourites can be saved in favourites of each device.**
- **Downloading favourites in your Bluetooth® device does not be supported.**
- **To save favourite, contacts should be downloaded.**
- **Contact saved in favourites will not be automatically updated if the contact has been updated in the phone. To update favourites, delete the favourite and create a new favourite.**

Call history

Press the **[PHONE]** button ▶ Select [Call history].

Displays all of your call history. Select from the list to dial the number.

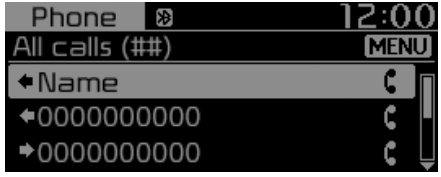

Displays Menu Popup when pressing the **[MENU]** button.

- Download: Downloads the call history information from your Bluetooth® device.
- All calls: Lists the all call history.
- Dialled calls: Lists the calls that you made.
- Received calls: Lists the calls that you have received.
- Missed calls: Lists the calls you missed.

✻ NOTICE

- **Call history may not be saved in the call history list in some Bluetooth® devices.**
- **Calls from restricted ID's are not saved in the call history list.**
- **Up to 50 calls can be added in each Dialled calls/Received calls/Missed calls list.**
- **The durations of each dialed/received call are not displayed in your car's call history list.**
- **Whilst the call history download is in progress, the status bar displays an icon ( ).**
- **If the call history download is turned off on the Bluetooth® device, the call history download will fail.**

(Continued)

(Continued)

- **Some devices require a device authentication for downloading your call history. If download fails, check if the Bluetooth® settings or display status are normal.**

Contacts

Press the **[PHONE]** button ▶ Select [Contacts].

Displays the list of Contacts. Select from the list to dial the number.



Displays Menu Popup when pressing the **[MENU]** button.

- Download: Downloads contacts from your Bluetooth® device.

Requesting download

Some devices require a device authentication for downloading your call history and contacts.

If download fails, check the Bluetooth® device settings or the screen state.

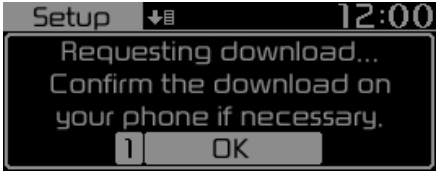

✻ NOTICE

- **Up to 2000 phone numbers can be downloaded from a single, paired Bluetooth® device.**
- **You cannot edit or delete downloaded phone numbers from your car.**
- **Contacts can be viewed only when the Bluetooth® device is connected.**
- **Even if the Bluetooth® device is disconnected, the downloaded data will remain. (Note that deleting a paired device will also delete all downloaded Contacts and call history data)**
- **Downloaded phone numbers may be lost depending on the condition of the head unit. Keep your important data in a safe place.**
- **The status bar displays a ( ) whilst downloading contacts.**
- **The download will not be available if the contacts download function is turned off on your Bluetooth® device.**

(Continued)

(Continued)

- **Phone contact names should be saved in English or they may not be displayed correctly.**
- **The time of contacts/call history download may differ depending on the Bluetooth® devices.**
- **Some devices require a device authentication for downloading your contacts. If download fails, check your phone screen and confirm the download if necessary.**

Accept/Reject Call

If there is an incoming call, a popup message will appear.



- To answer the incoming call, select [Accept] on the screen or press the **[CALL]** button on the steering wheel remote control.
- To reject the call, select [Reject] on the screen or press the **[END]** button on the steering wheel remote control.

✻ NOTICE

In some Bluetooth® devices, the caller's number may not be displayed, and the Reject feature may not be supported.

Using the Menu During a Phone Call

When making a call, you can use the following menu items.

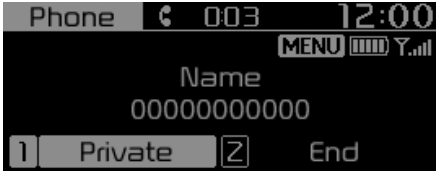

(1) Private: Switches a voice call from the car Hands-free to the Bluetooth® device.

(2) End: Ends a call.

Displays Menu Popup when pressing the **[MENU]** button.

- Microphone Volume(Outgoing Volume): Displays the Mic Volume settings. You can adjust the in-call volume that the other party hears (level 1 - 5).

✻ NOTICE

- **Up to 2000 phone numbers can be downloaded from a single, paired Bluetooth® device.**
- **If the caller's number is listed in Contacts, the caller's name will be displayed. Otherwise, only the number will be displayed. In some Bluetooth® devices, the phone number may not be displayed.**
- **In some Bluetooth® devices, the Use Private feature may not be supported.**
- **In some Bluetooth® devices, the Switch feature may not be supported.**
- **The phone number may not be properly displayed in some Bluetooth® devices.**
- **During a phone call on a Bluetooth® Handsfree, you cannot access other modes, such as Radio and Setup.**
- **Depending on handset types, the in-call volume the other party hears may differ. If the other party hears your voice too low or too loud, adjust the mic volume.**

Phone settings

Press the **[PHONE]** button ▶ Select [Phone settings].

Moves to a screen of Phone settings. Refer to [Setup] ▶ [Phone settings] manual for more information.

Setup

Display

Press the **[SETUP/CLOCK]** button ▶ Select [Display].

- Song information(Media Display): When playing an MP3 file, select the desired display info from [Folder/File] or [Artist/Title/Album].
- Mode popup: During [On] state, press the **[RADIO]** or **[MEDIA]** button to display the mode change popup.
- Scroll text(Text Scroll): If MP3 file name is too long to display, the file name is scrolled from right to left.
  - Title name on USB/iPod®/BT Audio Screen.
  - Focused File/Folder name on play list.
  - Focused Contacts name on Call history/Contacts/Favourites list.
  - Focused vehicle name on Paired devices, Delete devices, Connection priority settings list.

(if equipped)

Sound

Press the **[SETUP/CLOCK]** button ▶ Select [Sound].

- Position: Selects the sound position.
- Equaliser(Tone): Selects the sound tone.
- Speed dependent vol.: Controls the volume level automatically according to the speed of the vehicle.

Clock

Press the **[SETUP/CLOCK]** button ▶ Select [Clock].

- Clock: Adjusts the number currently in focus to set the [hour], and press the **TUNE** knob to set the [minute] and [AM/PM].
- Date: Adjusts the number currently in focus to make the settings and press the **TUNE** knob to move to the next settings.
- Time format: Sets the 12/24 hour time format of the audio system.
- Display(Power OFF): Displays time/date on screen when the audio system turns power off.

Phone (if equipped)

Add new device

Press the **[SETUP/CLOCK]** button ▶ Select [Phone] ▶ Select [Add new device].

The following steps are the same as those described in the section [Pairing a New Device] on the previous page.

Connect/Disconnect device

Press the **[SETUP/CLOCK]** button ▶ Select [Phone] ▶ Select [Paired devices].

Displays the paired Bluetooth® device list. From the paired device list, select the device you want to connect or disconnect.

✻ NOTICE

- **Displays the icons when Bluetooth® device is connected.**
  : An icon appears when you make a Bluetooth® Audio connection.
  : An icon appears when you make a Bluetooth® Handsfree connection.
- **Only one Bluetooth® device can be connected at a time.**
- **Bluetooth® Handsfree and Bluetooth® Audio functions are supported. Handsfree and audio-supported devices, such as a Bluetooth® smartphone or audio, will function normally.**
- **If the system is not stable due to a vehicle-Bluetooth® device communication error, delete the paired device on each device and pair/connect the Bluetooth® device again.**

Delete devices

Press the **[SETUP/CLOCK]** button ▶ Select [Phone] ▶ Select [Delete devices].

Displays the paired Bluetooth® device list. When selecting from the list, the device is deleted.

✻ NOTICE

- **When you delete a paired device, the Call history and Contacts stored in the head unit are also deleted.**
- **To re-use a deleted device, you must pair the device again.**

Connection priority

Press the **[SETUP/CLOCK]** button ▶ Select [Phone] ▶ Select [Connection priority].

- Select the device to want to set the connection priority of paired devices.
- If “Not selected(None)” is chosen, the Bluetooth® system will try to connect to the last connected device, then to all paired devices.

✻ NOTICE

- **When the engine is running, the selected Bluetooth® device is automatically connected. If you fail to connect the selected device, the previously-connected device is automatically connected, and if it also fails, then it tries to connect all paired devices sequentially.**
- **Depending on auto connection priority, connection to a device may take time.**
- **If a Bluetooth® device becomes disconnected due to being out of communication range, turning the device OFF, or a Bluetooth® communication error, corresponding Bluetooth® devices are automatically searched and reconnected.**
- **Even if you are outside, the Bluetooth® device will be automatically connected once you are in the vicinity of the vehicle. If you do not want to automatically connect your Bluetooth® device, turn off the Bluetooth® feature in your Bluetooth® device.**

(Continued)

(Continued)

- **In some Bluetooth® devices, starting the ignition whilst talking through Bluetooth® enabled handsfree call will result in the call becoming disconnected due to car handsfree call transfer. If you use your phone outside the vehicle, turn off the Bluetooth® feature in your phone.**

Language

Press the **[SETUP/CLOCK]** button ▶ Select [Language].

Changes the display language.

Display Off

Press the **[SETUP/CLOCK]** button ▶ Select [Display off].

Audio operation is maintained and only the screen will be turned Off. In the Screen Off state, press any button to turn the Screen On again.

Declaration of Conformity

CE for EU

Declaration of Conformity

We, manufacturer, hereby declare that the product

Model: ACB10G6RE (Variant: ACB00G6GG, ACB10G6GG, ACB00G6GN, ACB10G6GN, ACB00G6GL, ACB10G6GL, ACB00G6GE, ACB10G6GE,, ACB01G6GG, ACB11G6GG ACB00G6EE, ACB10G6EE, ACB00G6EG, ACB10G6EG, ACB00G6RE)
Type: DIGITAL CAR AUDIO SYSTEM

satisfies all the technical regulations applicable to the product within the scope of Council Directives 2006/95/EC, 2004/108/EC and 99/5/EC:

Radio: EN 300 328 V.1.9.1
EN 62311:2008
EMC: EN 301 489-1 V.1.9.2 /-17 V2.2.1
EN 55013:2013, EN 55020:2007+A11:2011
Safety: EN 60065:2014

All essential radio test suites have been carried out.

Testing laboratory : KCTL Inc.

65, Sinwon-ro, Yeongtong-gu, Suwon, Gyeonggi-do, Korea 443-390
Tel. +82 70 8685 8324 / Fax. +82 505 299 8311

Authorized representative or manufacturer :

Hyundai Mobis Co., Ltd.
203, Teheran-ro, Gangnam-gu, Seoul, 135-977, Korea
Tel. 82-31-260-0098 / Fax. 82-31-899-1788

This declaration is issued under the sole responsibility of the manufacturer and, if applicable, his authorized Representative, and is marked in accordance with the CE marking directive 93/68/EEC.

Point of contact :

Hyundai Mobis Co., Ltd. Tel. 82-31-260-2707 / Fax. 82-31-899-1788

Seoul, Korea July 05, 2016

CE

최능훈

/ S. H. Choe
/ Director

NCC for Taiwan

根據交通部低功率電波輻射性電機管理辦法 規定:	
第十二條	經型式認證合格之低功率射頻電機，非經許可，公司、商號或使用者均不得擅自變更頻率、加大功率或變更原設計之特性及功能。
第十四條	低功率射頻電機之使用不得影響飛航安全及干擾合法通信；經發現有干擾現象時，應立即停用，並改善至無干擾時方得繼續使用。 前項合法通信，指依電信法規定作業之無線電通信。 低功率射頻電機須忍受合法通信或工業、科學及醫療用電波輻射性電機設備之干擾。

ANATEL for Brazil

"Este produto está homologado pela ANATEL, de acordo com os procedimentos regulamentados pela resolução nº . 242/2000 e atende aos requisitos técnicos e aplicados"

Para maiores informações, consulte o site da ANATEL www.anatel.gov.br



3416-16-4902

Este equipamento opera em caráter secundário, isto é, não tem direito a proteção contra interferência prejudicial, mesmo de estações do mesmo tipo, e não pode causar interferência a sistemas operando em caráter primário.

IFETEL

“La operación de este equipo está sujeta a las siguientes dos condiciones: (1) es posible que este equipo o dispositivo no cause interferencia perjudicial y (2) este equipo o dispositivo debe aceptar cualquier interferencia, incluyendo la que pueda causar su operación no deseada.”

Driving your vehicle

Before driving 6-4
- Before entering vehicle 6-4
- Necessary inspections 6-4
- Before starting 6-4

Key positions 6-6
- Ignition switch position 6-6
- Starting the engine 6-7
- Stopping the Engine 6-9
- Cold start support system (Flex fuel vehicle, for Brazil and Paraguay) 6-9

ENGINE START/STOP button 6-10
- Illuminated ENGINE START/STOP button 6-10
- ENGINE START/STOP button position 6-10
- Starting the engine 6-14
- Stopping the Engine 6-16
- Cold start support system (Flex fuel vehicle, for Brazil and Paraguay) 6-17

ISG (Idle Stop and Go) system 6-18
- Auto stop 6-18
- Auto start 6-19
- Condition of ISG system operation 6-20
- ISG system deactivation 6-21
- ISG system malfunction 6-21

Manual transaxle 6-23
- Manual transaxle operation 6-23
- Good driving practices 6-25

Automatic transaxle 6-27
- Automatic transaxle operation 6-27
- Good driving practices 6-32

Brake system 6-34
- Power brakes 6-34
- Parking brake 6-36
- Anti-lock brake system (ABS) 6-38
- Electronic Stability Control (ESC) 6-41
- Hill-start assist control (HAC) 6-45
- Vehicle stability management (VSM) 6-45
- ESS : Emergency Stop Signal 6-47
- Good braking practices 6-47

Cruise control system 6-49
- Cruise control switch 6-50
- To set cruise control speed 6-51
- To increase cruise control set speed 6-52
- To decrease the cruising speed 6-53
- To temporarily accelerate with the cruise control on 6-53
- To cancel cruise control 6-53
- To resume cruising speed at more than approximately 30 km/h (20 mph) 6-54
- To turn cruise control off 6-54

Speed limit control system. 6-55
• Speed limit control switch 6-55
• To set speed limit 6-55
• To turn off the speed limit control. 6-57
Radar type Autonomous Emergency Braking . . . 6-58
• System setting and activation. 6-58
• AEB warning message and system control. 6-60
• Brake operation 6-61
• Sensor to detect the distance from the vehicle in front (front radar). 6-62
• System malfunction 6-63
• Limitation of the system 6-65
Economical operation 6-69
Special driving conditions 6-71
• Hazardous driving conditions 6-71
• Rocking the vehicle 6-71
• Smooth cornering 6-72
• Driving at night 6-73
• Driving in the rain. 6-73
• Driving in flooded areas 6-74
• Driving off-road. 6-74
• Highway driving 6-75
Winter driving 6-76
• Snowy or icy conditions 6-76
• Use high quality ethylene glycol coolant. 6-79
• Check battery and cables 6-79
• Change to "winter weight" oil if necessary 6-79
• Check spark plugs and ignition system. 6-79
• To keep locks from freezing 6-80
• Use approved window washer anti-freeze in system . . 6-80
• Don't let your parking brake freeze 6-80
• Don't let ice and snow accumulate underneath 6-80
• Carry emergency equipment 6-80
Vehicle weight 6-81
• Base kerb weight 6-81
• Vehicle kerb weight 6-81
• Cargo weight 6-81
• GAW (Gross axle weight) 6-81
• GAWR (Gross axle weight rating). 6-81
• GVW (Gross vehicle weight) 6-81
• GVWR (Gross vehicle weight rating) 6-81
• Overloading 6-81

⚠ WARNING - ENGINE EXHAUST CAN BE DANGEROUS!

Engine exhaust fumes can be extremely dangerous. If, at any time, you smell exhaust fumes inside the vehicle, open the windows immediately.

- **Do not inhale exhaust fumes.**

  Exhaust fumes contain carbon monoxide, a colourless, odourless gas that can cause unconsciousness and death by asphyxiation.

- **Be sure the exhaust system does not leak.**

  The exhaust system should be checked whenever the vehicle is raised to change the oil or for any other purpose. If you hear a change in the sound of the exhaust or if you drive over something that strikes the underneath side of the vehicle, have the system checked by a professional workshop. Kia recommends to visit an authorised Kia dealer/service partner.

- **Do not run the engine in an enclosed area.**

  Letting the engine idle in your garage, even with the garage door open, is a hazardous practice. Never run the engine in your garage any longer than it takes to start the engine and back the car out.

- **Avoid idling the engine for prolonged periods with people inside the car.**

  If it is necessary to idle the engine for a prolonged period with people inside the car, be sure to do so only in an open area with the air intake set at "Fresh" and fan operating at one of the higher speeds so fresh air is drawn into the interior.

If you must drive with the trunk lid open because you are carrying objects that make this necessary:

1. Close all windows.
2. Open side vents.
3. Set the air intake control at "Fresh", the air flow control at "Floor" or "Face" and the fan at one of the higher speeds.

To assure proper operation of the ventilation system, be sure the ventilation air intakes located just in front of the windscreen are kept clear of snow, ice, leaves or other obstructions.

BEFORE DRIVING

Before entering vehicle

- Be sure that all windows, outside mirror(s), and outside lights are clean.
- Check the condition of the tyres.
- Check under the vehicle for any sign of leaks.
- Be sure there are no obstacles behind you if you intend to back up.

Necessary inspections

Fluid levels, such as engine oil, engine coolant, brake fluid, and washer fluid should be checked on a regular basis, with the exact interval depending on the fluid. Further details are provided in section 8, “Maintenance”.

⚠ WARNING

Driving whilst distracted can result in a loss of vehicle control, that may lead to an accident, severe personal injury, and death. The driver's primary responsibility is in the safe and legal operation of a vehicle, and use of any handheld devices, other equipment, or vehicle systems which take the driver's eyes, attention and focus away from the safe operation of a vehicle or which are not permissible by law should never be used during operation of the vehicle.

Before starting

- Close and lock all doors.
- Position the seat so that all controls are easily reached.
- Adjust the inside and outside rearview mirrors.
- Be sure that all lights work.
- Check all gauges.
- Check the operation of warning lights when the ignition switch is turned to the ON position.
- Release the parking brake and make sure the brake warning light goes out.

For safe operation, be sure you are familiar with your vehicle and its equipment.

⚠ WARNING

All passengers must be properly belted whenever the vehicle is moving. Refer to "Seat belts" in section 3 for more information on their proper use.

⚠ WARNING

Always check the surrounding areas near your vehicle for people, especially children, before putting a car into D (Drive) or R (Reverse).

⚠ WARNING

- Driving under the influence of alcohol or drugs

Drinking and driving is dangerous. Drunk driving is the number one contributor to the highway death toll each year. Even a small amount of alcohol will affect your reflexes, perceptions and judgment. Driving whilst under the influence of drugs is as dangerous or more dangerous than driving drunk.

You are much more likely to have a serious accident if you drink or take drugs and drive.

If you are drinking or taking drugs, don't drive. Do not ride with a driver who has been drinking or taking drugs. Choose a designated driver or call a cab.

⚠ WARNING

- **When you intend to park or stop the vehicle with the engine on, be careful not to depress the accelerator pedal for a long period of time. It may overheat the engine or exhaust system and cause fire.**
- **When you make a sudden stop or turn the steering wheel rapidly, loose objects may drop on the floor and it could interfere with the operation of the foot pedals, possibly causing an accident. Keep all things in the vehicle safely stored.**
- **If you do not focus on driving, it may cause an accident. Be careful when operating what may disturb driving such as audio or heater. It is the responsibility of the driver to always drive safely.**

KEY POSITIONS

Ignition switch position

LOCK

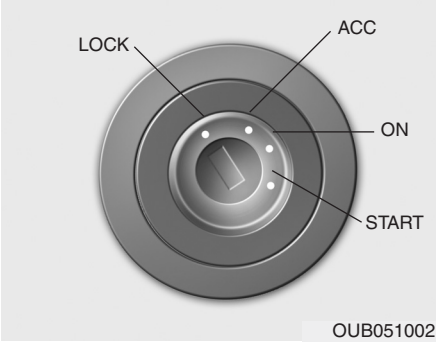

The steering wheel locks to protect against theft. The ignition key can be removed only in the LOCK position.

After parking the vehicle, if driver's door is opened without removing the ignition key at lock or ACC position, warning chime will alarm you to remove the key. Once it is removed, chime will end.

ACC (Accessory)

The steering wheel is unlocked and electrical accessories are operative.

✻ NOTICE

If difficulty is experienced turning the ignition switch to the ACC position, turn the key whilst turning the steering wheel right and left to release the tension.

ON

The warning lights can be checked before the engine is started. This is the normal running position after the engine is started.

Do not leave the ignition switch ON if the engine is not running to prevent battery discharge.

START

Turn the ignition switch to the START position to start the engine. The engine will crank until you release the key; then it returns to the ON position. The brake warning light can be checked in this position.

⚠ WARNING - Ignition switch

- **Never turn the ignition switch to LOCK or ACC whilst the vehicle is moving. This would result in loss of directional control and braking function, which could cause an accident.**
- **The anti-theft steering column lock is not a substitute for the parking brake. Before leaving the driver's seat, always make sure the shift lever is engaged in 1st gear for the manual transaxle or P (Park) for the automatic transaxle, set the parking brake fully and shut the engine off. Unexpected and sudden vehicle movement may occur if these precautions are not taken.**

(Continued)

(Continued)

- **Never reach for the ignition switch, or any other controls through the steering wheel whilst the vehicle is in motion. The presence of your hand or arm in this area could cause a loss of vehicle control, an accident and serious bodily injury or death.**
- **Do not place any movable objects around the driver's seat as they may move whilst driving, interfere with the driver and lead to an accident.**

Starting the engine

⚠ WARNING

- **Always wear appropriate shoes when operating your vehicle. Unsuitable shoes (high heels, ski boots,etc.) may interfere with your ability to use the brake and accelerator pedal, and the clutch (if equipped).**
- **Do not start the vehicle with the accelerator pedal depressed. The vehicle can move and lead to an accident.**
- **Wait until the engine rpm is normal. The vehicle may suddenly move if the brake padel is released when the rpm is high.**

✻ NOTICE - Kick down mechanism (if equipped)

If your vehicle is equipped with a kick down mechanism in the accelerator pedal, it prevents you from driving at full throttle unintentionally by making the driver require increased effort to depress the accelerator pedal. However, if you depress the pedal more than approximately 80%, the vehicle can be at full throttle and the accelerator pedal will be easier to depress. This is not a malfunction but a normal condition.

Starting the petrol engine

1. Make sure the parking brake is applied.
2. **Manual Transaxle** - Depress the clutch pedal fully and shift the transaxle into Neutral. Keep the clutch pedal and brake pedal depressed whilst turning the ignition switch to the start position.

   Automatic Transaxle - Place the transaxle shift lever in P (Park). Depress the brake pedal fully.

   You can also start the engine when the shift lever is in the N (Neutral) position.
3. Turn the ignition switch to START and hold it there until the engine starts (a maximum of 10 seconds), then release the key.

It should be started ***without depressing the accelerator.***

4. Do not wait for the engine to warm up whilst the vehicle remains stationary.

   Start driving at moderate engine speeds. (Steep accelerating and decelerating should be avoided.)

Manual transaxle

- When starting the vehicle, keep the clutch and brake pedal depressed, check if the rpm is within the appropriate range, and place the shift lever into the required position.
- Release the parking brake, take your foot off the clutch pedal, depress the accelerator pedal and slowly start the vehicle.

⚠ CAUTION

If the engine stalls whilst you are in motion, do not attempt to move the shift lever to the P (Park) position. If traffic and road conditions permit, you may put the shift lever in the N (Neutral) position whilst the vehicle is still moving and turn the ignition switch to the START position in an attempt to restart the engine.

⚠ CAUTION

- ***Do not engage the starter for more than 10 seconds. If the engine stalls or fails to start, wait 5 to 10 seconds before re-engaging the starter. Improper use of the starter may damage it.***
- ***Do not turn the ignition switch to the START position with the engine running. It may damage the starter.***

Stopping the Engine

Manual Transaxle

1. When the vehicle is stationary, depress the clutch and brake pedal at the same time.
2. With the clutch and brake pedal depressed, shift the shift lever into N (Neutral).
3. With the brake pedal depressed, apply the parking brake.
4. Turn the ignition switch to the lock position and remove it.

Automatic Transaxle

1. When the vehicle is stationary, depress the brake pedal.
2. With the brake pedal depressed, shift the shift lever into P (Park).
3. With the brake pedal depressed, apply the parking brake.
4. Turn the ignition switch to the lock position and remove it.

⚠ CAUTION

- ***Try not to idle the vehicle at high speeds just before turning off the engine.***
- ***When the vehicle is parked on a slope, make sure the transaxle is shifted into P (Park) for automatic transaxle. For manual transaxle, shift the transaxle into 1 (First) gear on uphill grades, R (Reverse) on downhill grades and place chocks under the tyres.***
- ***For automatic transaxle vehicles, make sure the shift lever is shifted into P (Park) when parking the vehicle. If not, the vehicle might move from external impacts.***

⚠ WARNING

Do not park the vehicle on a steep hill. It may cause the vehicle to move.

Cold start support system (Flex fuel vehicle, for Brazil and Paraguay)

If you start the engine equipped with the flex system when the outside temperature is low (below 20°C), the cold start support system will operate automatically depending on the usage condition.

For starting the FFV (Flex fuel vehicle) when the engine is cold and the outside temperature is low (below 20°C), there should be the petrol in the reservoir.

For filling the petrol, refer to the chapter 4 and chapter 1.

ENGINE START/STOP BUTTON (IF EQUIPPED)

Illuminated ENGINE START/STOP button

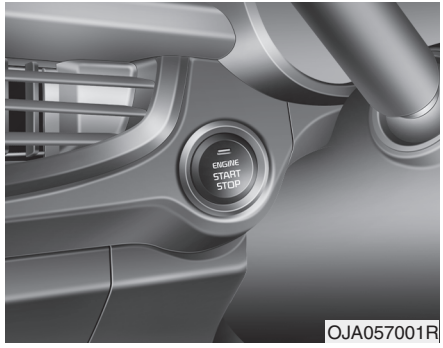

Whenever the front door is opened, the ENGINE START/STOP button will illuminate for your convenience. The light will go off after about 30 seconds when the door is closed. It will also go off immediately when the theft-alarm system is armed.

ENGINE START/STOP button position

OFF



Not illuminated

• With manual transaxle

To turn off the engine (START/RUN position) or vehicle power (ON position), stop the vehicle then press the ENGINE START/STOP button.

• With automatic transaxle

To turn off the engine (START/RUN position) or vehicle power (ON position), press the ENGINE START/STOP button with the shift lever in the P (Park) position. When you press the ENGINE START/STOP button without the shift lever in the P (Park) position, the ENGINE START/STOP button will not change to the OFF position but to the ACC position.

Also, the steering wheel locks when the ENGINE START/STOP button is in the OFF position to protect you against theft. It locks when the door is opened.

Vehicles equipped with anti-theft steering column lock

The steering wheel locks when the engine start/stop button is in the OFF position to protect you against theft. It locks when the door is opened.

If the steering wheel is not locked properly when you open the driver's door, the warning chime will sound. If the problem is not solved, have the system checked by a professional workshop. Kia recommends to visit an authorised Kia dealer/service partner.

In addition, if the ENGINE START/STOP button is in the OFF position after the driver's door is opened, the steering wheel will not lock and the warning chime will sound. In such a situation, close the door. Then the steering wheel will lock and the warning chime will stop.

✻ NOTICE

If the steering wheel doesn't unlock properly, the ENGINE START/STOP button will not work. Press the ENGINE START/STOP button whilst turning the steering wheel right and left to release the tension.

- **If difficulty is experienced turning the engine start/stop button to the ACC position, turn the steering wheel right and left to release the tension whilst pressing the engine start/stop button.**
- **When you turn off the engine, the vehicle should be stopped.**

⚠ CAUTION

You are able to turn off the engine (START/RUN) or vehicle power (ON), only when the vehicle is not in motion. In an emergency situation whilst the vehicle is in motion, you are able to turn the engine off and to the ACC position by pressing the engine start/stop button for more than 2 seconds or 3 times successively within 3 seconds. If the vehicle is still moving, you can restart the engine without depressing the brake pedal by pressing the engine start/stop button with the shift lever in the N (Neutral) position.

ACC(Accessory)



Orange

• With manual transaxle

Press the engine start/stop button when the button is in the OFF position without depressing the clutch pedal.

• With automatic transaxle

Press the ENGINE START/STOP button whilst it is in the OFF position without depressing the brake pedal.

The steering wheel unlocks and electrical accessories are operational.

If the ENGINE START/STOP button is in the ACC position for more than 1 hour, the button is turned off automatically to prevent battery discharge.

ON



Red

• With manual transaxle

Press the engine start/stop button when the button is in the ACC position without depressing the clutch pedal.

• With automatic transaxle

Press the ENGINE START/STOP button whilst it is in the ACC position without depressing the brake pedal.

The warning lights can be checked before the engine is started. Do not leave the ENGINE START/STOP button in the ON position for a long time. The battery may discharge, because the engine is not running.

START/RUN



Not illuminated

• With manual transaxle

To start the engine, depress the clutch pedal and brake pedal, then press the engine start/stop button with the shift lever in the N (Neutral) position.

• With automatic transaxle

To start the engine, depress the brake pedal and press the engine start/stop button with the shift lever in the P (Park) or the N (Neutral) position. For your safety, start the engine with the shift lever in the P (Park) position.

✻ NOTICE

If you press the ENGINE START/STOP button without depressing the clutch pedal for manual transaxle vehicles or without depressing the brake pedal for automatic transaxle vehicles, the engine will not start and the engine start/stop button changes as follow: OFF ➔ACC ➔ ON ➔ OFF or ACC

✻ NOTICE

If you leave the ENGINE START/STOP button in the ACC or ON position for a long time, the battery will discharge.

⚠ WARNING

- Never press the ENGINE START/STOP button whilst the vehicle is in motion. This would result in loss of directional control and braking function, which could cause an accident.
- The anti-theft steering column lock is not a substitute for the parking brake. Before leaving the driver's seat, always make sure the shift lever is engaged in P (Park), set the parking brake fully and shut the engine off. Unexpected and sudden vehicle movement may occur if these precautions are not taken.

(Continued)

(Continued)

- Never reach for the ENGINE START/STOP button or any other controls through the steering wheel whilst the vehicle is in motion. The presence of your hand or arm in the area could cause loss of vehicle control, an accident and serious bodily injury or death.
- Do not place any movable objects around the driver's seat as they may move whilst driving, interfere with the driver and lead to an accident.

Starting the engine

⚠ WARNING

- **Always wear appropriate shoes when operating your vehicle. Unsuitable shoes (high heels, ski boots,etc.) may interfere with your ability to use the brake and accelerator pedal.**
- **Do not start the vehicle with the accelerator pedal depressed. The vehicle can move and lead to an accident.**
- **Wait until the engine rpm is normal. The vehicle may suddenly move if the brake padel is released when the rpm is high.**

✻ NOTICE

- Kick down mechanism (if equipped)

If your vehicle is equipped with a kick down mechanism in the accelerator pedal, it prevents you from driving at full throttle unintentionally by making the driver require increased effort to depress the accelerator pedal. However, if you depress the pedal more than approximately 80%, the vehicle can be at full throttle and the accelerator pedal will be easier to depress. This is not a malfunction but a normal condition.

Starting the petrol engine

1. Carry the smart key or leave it inside the vehicle.
2. Make sure the parking brake is firmly applied.
3. **Manual Transaxle** - Depress the clutch pedal fully and shift the transaxle into Neutral. Keep the clutch pedal and brake pedal depressed whilst starting the engine.

   Automatic Transaxle - Place the transaxle shift lever in P (Park). Depress the brake pedal fully.

   You can also start the engine when the shift lever is in the N (Neutral) position.
4. Press the engine start/stop button.

*It should be started **without depressing the accelerator.***

5. Do not wait for the engine to warm up whilst the vehicle remains stationary.

   Start driving at moderate engine speeds. (Steep accelerating and decelerating should be avoided.)

Manual transaxle

- When starting the vehicle, keep the clutch and brake pedal depressed, check if the rpm is within the appropriate range, and place the shift lever into the required position.
- Release the parking brake, take your foot off the clutch pedal, depress the accelerator pedal and slowly start the vehicle.

⚠ CAUTION

Do not turn the ignition switch to the START position with the engine running. It may damage the starter.

- Even if the smart key is in the vehicle, if it is far away from you, the engine may not start.
- When the ENGINE START/STOP button is in the ACC position or above, if any door is opened, the system checks for the smart key. If the smart key is not in the vehicle, the "" or "KEY OUT" indicator will blink or the warning "Key is not in vehicle" will illuminate on the LCD display. And if all doors are closed, the chime will sound for 5 seconds. The indicator or warning will turn off whilst the vehicle is moving. Always have the smart key with you.

⚠ WARNING

The engine will start, only when the smart key is in the vehicle.

Never allow children or any person who is unfamiliar with the vehicle touch the ENGINE START/STOP button or related parts.

⚠ CAUTION

If the engine stalls whilst the vehicle is in motion, do not attempt to move the shift lever to the P (Park) position. If the traffic and road conditions permit, you may put the shift lever in the N (Neutral) position whilst the vehicle is still moving and press the ENGINE START/STOP button in an attempt to restart the engine.

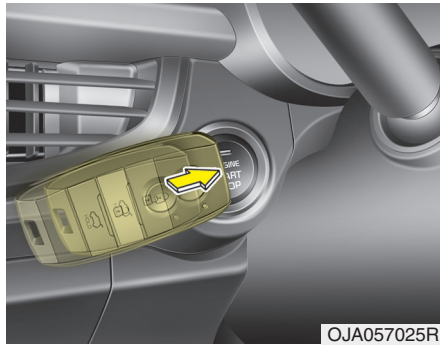

✻ NOTICE

- **If the battery is weak or the smart key does not work correctly, you can start the engine by pressing the engine start/stop button with the smart key.**

(Continued)

(Continued)

- **When the brake switch fuse is blown, you can't start the engine normally. Replace the fuse with a new one. If it is not possible, you can start the engine by pressing the ENGINE START/STOP button for 10 seconds whilst it is in the ACC position. The engine can start without depressing the brake pedal. But for your safety always depress the brake pedal before starting the engine.**

⚠ CAUTION

Do not press the ENGINE START/STOP button for more than 10 seconds except when the stop lamp fuse is blown.

Stopping the Engine

Manual Transaxle

1. When the vehicle is stationary, depress the clutch and brake pedal at the same time.
2. With the clutch and brake pedal depressed, shift the shift lever into N (Neutral).
3. With the brake pedal depressed, apply the parking brake.
4. Press the ignition switch and turn off the engine.

Automatic Transaxle

1. When the vehicle is stationary, depress the brake pedal.
2. With the brake pedal depressed, shift the shift lever into P (Park).
3. With the brake pedal depressed, apply the parking brake.
4. Press the ignition switch and turn off the engine.

⚠ CAUTION

- ***Try not to idle the vehicle at high speeds just before turning off the engine.***
- ***When the vehicle is parked on a slope, make sure the transaxle is shifted into P (Park) for automatic transaxle. For manual transaxle, shift the transaxle into 1 (First) gear on uphill grades, R (Reverse) on downhill grades and place chocks under the tyres.***
- ***For automatic transaxle vehicles, make sure the shift lever is shifted into P (Park) when parking the vehicle. If not, the vehicle might move from external impacts.***

⚠ WARNING

Do not park the vehicle on a steep hill. It may cause the vehicle to move.

Cold start support system (Flex fuel vehicle, for Brazil and Paraguay)

If you start the engine equipped with the flex system when the outside temperature is low (below 20°C), the cold start support system will operate automatically depending on the usage condition.

For starting the FFV (Flex fuel vehicle) when the engine is cold and the outside temperature is low (below 20°C), there should be the petrol in the reservoir.

For filling the petrol, refer to the chapter 4 and chapter 1.

ISG (IDLE STOP AND GO) SYSTEM (IF EQUIPPED)

Your vehicle may be equipped with the ISG system, which reduces fuel consumption by automatically shutting down the engine, when the vehicle is at a standstill. (For example : red light, stop sign and traffic jam)

The engine starts automatically as soon as the starting conditions are met.

The ISG system is ON whenever the engine is running.

✻ NOTICE

When the engine automatically starts by the ISG system, some warning lights (ABS, ESC, ESC OFF, EPS or Parking brake warning light) may turn on for a few seconds.
This happens because of low battery voltage. It does not mean the system is malfunctioning.

Auto stop

To stop the engine in idle stop mode

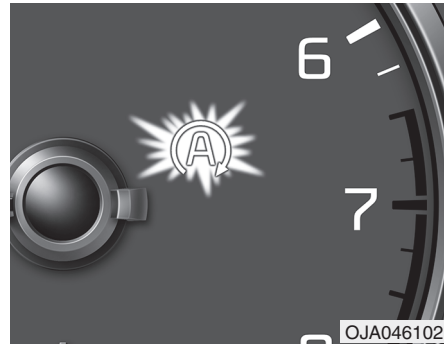

Manual transaxle

1. Decrease the vehicle speed to less than 5 km/h.
2. Shift into N (Neutral) position.
3. Release the clutch pedal.

Automatic transaxle

1. Decrease the vehicle speed to less than 5 km/h.
2. Press the brake pedal.

The engine will stop and the green AUTO STOP indicator (Ⓐ) on the instrument cluster will illuminate. If your vehicle is equipped with a supervision cluster, the notice will illuminate on the LCD display.

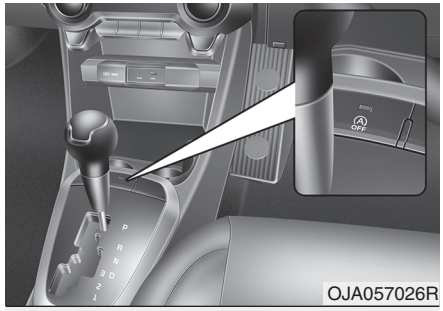



OJA056015L

✻ NOTICE

- **You must reach a speed of at least 10 km/h since last idle stop.**

(Continued)

(Continued)

- **If you unfasten the seat belt or open the driver's door (engine bonnet) in auto stop mode, the light on the ISG OFF button will illuminate and ISG system is deactivated. If your vehicle is equipped with a supervision cluster, the notice will illuminate on the LCD display.**

Turn the ignition switch to the START position to start the engine manually.

Auto start

To restart the engine from idle stop mode

■ Manual transaxle



OJA056017L

■ Automatic transaxle



OJA056016L

- Press the clutch pedal when the shift lever is in the N (Neutral) position.(Manual transaxle)
- Press the brake pedal for auto start. (Automatic transaxle)

The engine will start and the green AUTO STOP indicator (Ⓐ) on the instrument cluster will go out. If your vehicle is equipped with a supervision cluster, the notice will illuminate on the LCD display.

The engine will also restart automatically without the driver's any actions if the following occurs:

- The fan speed of manual climate control system is set above the 3rd position when the air conditioning is on.
- The fan speed of automatic climate control system is set above the 6th position when the air conditioning is on.
- When a certain amount of time has passed with the climate control system on.
- When the defroster is on.
- The brake vaccum pressure is low.
- The battery charging status is low.
- The vehicle speed exceeds 5 km/h.

The green AUTO STOP indicator (Ⓐ) on the instrument cluster will blink for 5 seconds.

Condition of ISG system operation

The ISG system will operate under the following condition:

- The driver's seat belt is fastened.
- The driver's door and bonnet are closed.
- The brake vacuum pressure is adequate.
- The battery is sufficiently charged.
- The outside temperature is more than -2°C (28.4°F).
- The outside temperature is under 32°C (89.6°F).
- The engine coolant temperature is not too low.

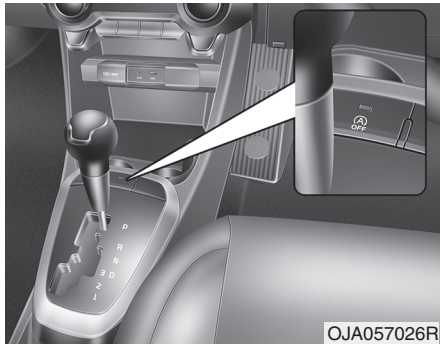

✻ NOTICE

- **If the ISG system does not meet that operation condition, the ISG system is deactivated. The light on the ISG OFF button will illuminate.**
- **If the light comes on continuously, please check the operation condition.**

ISG system deactivation

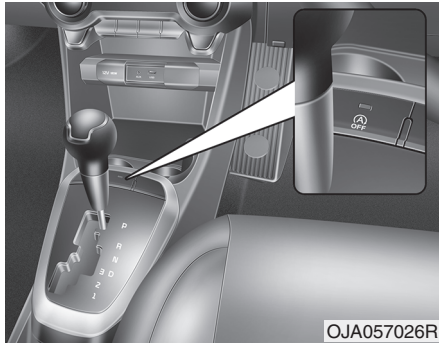

- If you want to deactivate the ISG system, press the ISG OFF button. The light on the ISG OFF button will illuminate.
- If you press the ISG OFF button again, the system will be activated and the light on the ISG OFF button will turn off.

ISG system malfunction

The system may not operate when:

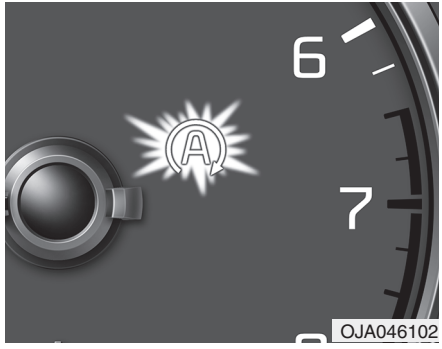

- The ISG related sensors or system error occurs.

The yellow AUTO STOP indicator (Ⓐ) on the instrument cluster will stay on after blinking for 5 seconds and the light on the ISG OFF button will illuminate.

✻ NOTICE

- If the ISG OFF button light is not turned off by pressing the ISG OFF button again or if the ISG system continuously does not work correctly, have your vehicle inspected by a professional workshop as soon as possible. Kia recommends to contact an authorised Kia dealer/service partner.
- When the ISG OFF button light comes on, it may stop illuminating after driving your vehicle at approximately 80 km/h for a maximum of two hours and setting the fan speed control knob below the 2nd position. If the ISG OFF button light continues to be illuminated in spite of the procedure, have your vehicle inspected by a professional workshop as soon as possible. Kia recommends to contact an authorised Kia dealer/service partner.

✻ NOTICE

If you want to use the ISG function, the battery sensor needs to be calibrated for approximately 4 hours with the ignition off and then, turn the engine on and off 2 or 3 times.

⚠ WARNING

When the engine is in Idle Stop mode, it's possible to restart the engine without the driver taking any action.

Before leaving the car or doing anything in the engine room area, stop the engine by turning the ignition switch to the LOCK(OFF) position or removing the ignition key.

MANUAL TRANSAXLE (IF EQUIPPED)

Manual transaxle operation

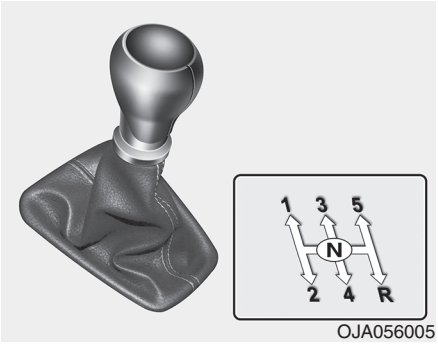

OJA056005

The manual transaxle has 5 forward gears.

This shift pattern is imprinted on the shift knob. The transaxle is fully synchronized in all forward gears so shifting to either a higher or a lower gear is easily accomplished.

Depress the clutch pedal down fully whilst shifting, then release it slowly.

If your vehicle is equipped with an ignition lock switch, the engine will not start when starting the engine without depressing the clutch pedal. (if equipped)

The shift lever must be returned to the neutral position before shifting into R (Reverse).

Make sure the vehicle is completely stopped before shifting into R (Reverse).

Never operate the engine with the tachometer (rpm) in the red zone.

⚠ CAUTION

- ***When downshifting from fifth gear to fourth gear, caution should be taken not to inadvertently press the shift lever sideways in such a manner that the second gear is engaged. Such a drastic downshift may cause the engine speed to increase to the point that the tachometer will enter the red-zone. Such over-revving of the engine and transaxle may possibly cause engine damage.***
- ***Do not downshift more than 2 gears or downshift the gear when the engine is running at high speed (5,000 RPM or higher). Such a downshifting may damage the engine, clutch and the transaxle.***

- During cold weather, shifting may be difficult until the transaxle lubricant is warmed up. This is normal and not harmful to the transaxle.
- If you've come to a complete stop and it's hard to shift into 1st or R(Reverse), leave the shift lever at N(Neutral) position and release the clutch. Press the clutch pedal back down, and then shift into 1st or R(Reverse) gear position.

⚠ CAUTION

- ***To avoid premature clutch wear and damage, do not drive with your foot resting on the clutch pedal. Also, don't use the clutch to hold the vehicle stopped on an uphill grade, whilst waiting for a traffic light, etc.***
- ***Do not use the shift lever as a handrest during driving, as this can result in premature wear of the transaxle shift forks.***
- ***To prevent possible damage to the clutch system, do not start with the 2nd (second) gear engaged except when you start on a slippery road.***

⚠ WARNING

- **Before leaving the driver's seat, always set the parking brake fully and shut the engine off. Then make sure the transaxle is shifted into 1st gear when the vehicle is parked on a level or uphill grade, and shifted into R (Reverse) on a downhill grade. Unexpected and sudden vehicle movement can occur if these precautions are not followed in the order identified.**
- **Do not use the engine brake (shifting from a high gear to lower gear) rapidly on slippery roads.**

  The vehicle may slip causing an accident.

Using the clutch

The clutch should be pressed all the way to the floor before shifting, then released slowly. The clutch pedal should always be fully released whilst driving. Do not rest your foot on the clutch pedal whilst driving. This can cause unnecessary wear. Do not partially engage the clutch to hold the vehicle on an incline. This causes unnecessary wear. Use the foot brake or parking brake to hold the vehicle on an incline. Do not operate the clutch pedal rapidly and repeatedly.

⚠ CAUTION

When operating the clutch pedal, press the clutch pedal down fully. If you don't press the clutch pedal fully, the clutch may be damaged or noise may occur.

Downshifting

When you must slow down in heavy traffic or whilst driving up steep hills, downshift before the engine starts to labour. Downshifting reduces the chance of stalling and gives better acceleration when you again need to increase your speed. When the vehicle is travelling down steep hills, downshifting helps maintain safe speed and prolongs brake life.

Good driving practices

- Never take the vehicle out of gear and coast down a hill. This is extremely hazardous. Always leave the vehicle in gear.
- Don't "ride" the brakes. This can cause them to overheat and malfunction. Instead, when you are driving down a long hill, shift to a lower gear. When you do this, engine braking will help slow down the vehicle.
- Slow down before shifting to a lower gear. This will help avoid over-revving the engine, which can cause damage.
- Slow down when you encounter cross winds. This gives you much better control of your vehicle.
- Be sure the vehicle is completely stopped before you attempt to shift into reverse. The transaxle can be damaged if you do not.

- Exercise extreme caution when driving on a slippery surface. Be especially careful when braking, accelerating or shifting gears. On a slippery surface, an abrupt change in vehicle speed can cause the drive wheels to lose traction and the vehicle to go out of control.

⚠ WARNING

- **Always buckle-up! In a collision, an unbelted occupant is significantly more likely to be seriously injured or killed than a properly belted occupant.**
- **Avoid high speeds when cornering or turning.**
- **Do not make quick steering wheel movements, such as sharp lane changes or fast, sharp turns.**
- **The risk of rollover is greatly increased if you lose control of your vehicle at highway speeds.**
- **Loss of control often occurs if two or more wheels drop off the roadway and the driver oversteers to reenter the roadway.**
- **In the event your vehicle leaves the roadway, do not steer sharply. Instead, slow down before pulling back into the travel lanes.**
- **Never exceed posted speed limits.**

AUTOMATIC TRANSAXLE (IF EQUIPPED)

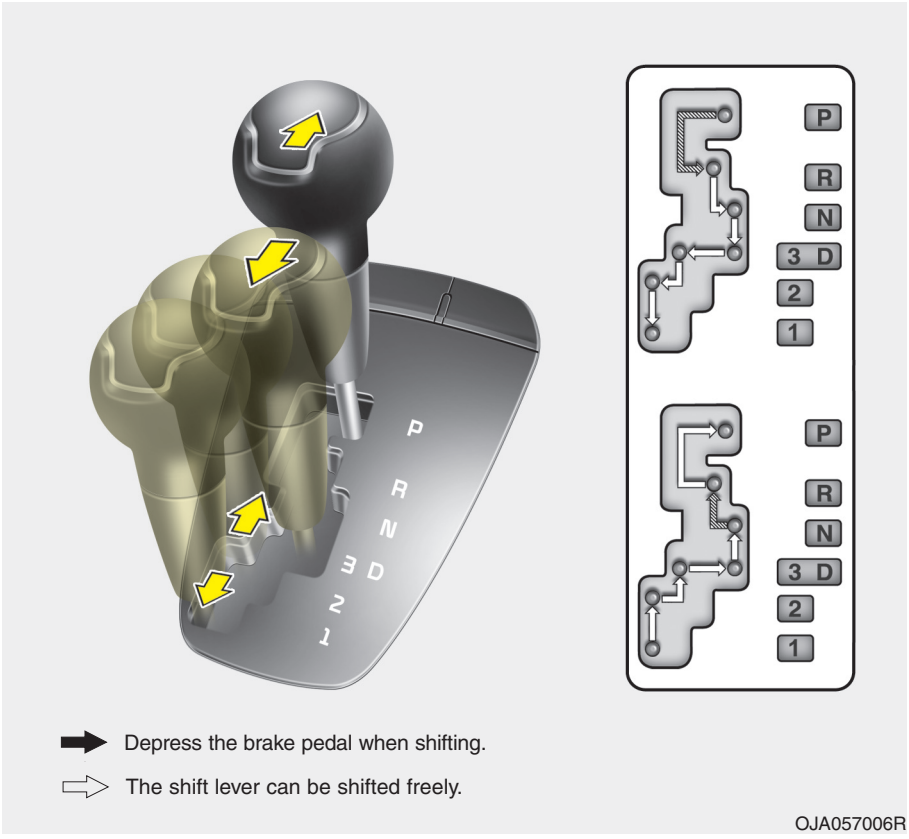

Automatic transaxle operation

The automatic transaxle has 4 forward speeds and one reverse speed. The individual speeds are selected automatically, depending on the position of the shift lever.

✻ NOTICE

The first few shifts on a new vehicle, if the battery has been disconnected, may be somewhat abrupt. This is a normal condition, and the shifting sequence will adjust after shifts are cycled a few times by the TCM (Transaxle Control Module) or PCM (Powertrain Control Module).

For smooth operation, depress the brake pedal when shifting from N (Neutral) to a forward or reverse gear.

⚠ WARNING - Automatic transaxle

- **Always check the surrounding areas near your vehicle for people, especially children, before shifting a car into D (Drive) or R (Reverse).**
- **Before leaving the driver's seat, always make sure the shift lever is in the P (Park) position; then set the parking brake fully and shut the engine off. Unexpected and sudden vehicle movement can occur if these precautions are not followed in the order identified.**
- **Do not use the engine brake (shifting from a high gear to lower gear) rapidly on slippery roads. The vehicle may slip causing an accident.**

⚠ CAUTION

- ***To avoid damage to your transaxle, do not accelerate the engine in R (Reverse) or any forward gear position with the brakes on.***
- ***When stopped on an incline, do not hold the vehicle stationary with engine power. Use the service brake or the parking brake.***
- ***Do not shift from N (Neutral) or P (Park) into D (Drive), or R (Reverse) when the engine is above idle speed.***

Transaxle ranges

The indicator in the instrument cluster displays the shift lever position when the ignition switch is in the ON position.

P (Park)

Always come to a complete stop before shifting into P (Park). This position locks the transaxle and prevents the drive wheels from rotating.

⚠ WARNING

- **Shifting into P (Park) whilst the vehicle is in motion will cause the drive wheels to lock which will cause you to lose control of the vehicle.**
- **Do not use the P (Park) position in place of the parking brake. Always make sure the shift lever is latched in the P (Park) position and set the parking brake fully.**
- **Never leave a child unattended in a vehicle.**

⚠ CAUTION

The transaxle may be damaged if you shift into P (Park) whilst the vehicle is in motion.

R (Reverse)

Use this position to drive the vehicle backward.

⚠ CAUTION

Always come to a complete stop before shifting into or out of R (Reverse); you may damage the transaxle if you shift into R (Reverse) whilst the vehicle is in motion, except as explained in "Rocking the vehicle" in this section.

N (Neutral)

The wheels and transaxle are not engaged. The vehicle will roll freely even on the slightest incline unless the parking brake or service brakes are applied.

⚠ WARNING

Do not drive with the shift lever in N (Neutral). The engine brake will not work and lead to an accident.

- Parking in N (Neutral) gear

Follow below steps when parking and you want the vehicle to move when pushed.

1. After parking your vehicle, step on the brake pedal and move the shift lever to [P] with the ignition button in [ON] or whilst the engine is running.
2. If the parking brake is applied unlock the parking brake.
3. Whilst pressing the brake pedal, turn the ignition button [OFF].
   - For smart key equipped vehicles, the ignition switch can be moved to [OFF] only when the shift lever is in [P].
4. Change the gear shift lever to [N] (Neutral) whilst pressing the brake pedal. Then, the vehicle will move when external force is applied.

⚠ CAUTION

- ***With the exception of parking in neutral gear, always park the vehicle in [P] (Park) for safety and engage the parking brake.***
- ***Before parking in [N] (Neutral) gear, first make sure the parking ground is level and flat. Do not park in [N] gear on any slopes or gradients.***

  If parked and left in [N], the vehicle may move and cause serious damage and injury.

D (Drive)

This is the normal forward driving position. The transaxle will automatically shift through a 4-gear sequence, providing the best fuel economy and power.

For extra power when passing another vehicle or climbing grades, depress the accelerator pedal fully (more than 80%) until the kick down mechanism (if equipped) works with a clicking noise, at which time the transaxle will automatically downshift to the next lower gear.

✻ NOTICE

Always come to a complete stop before shifting into D (Drive).

3 (Third gear)

Use for towing a trailer during hill climbing or to use engine braking downhill.

"3" automatically shifts between 1st, 2nd and 3rd gears. This means that no shift-up to 4th gear is performed. However, the shift-up to 4th gear is done when the car speed exceeds a certain value to prevent the engine from over-revving. Manually move the selector to "D" when returning to normal driving condition.

2 (Second gear)

Use for driving on a slippery road, hill climbing or engine braking downhill. "2" automatically shifts between first and second gears.

This means that no shift-up to 3rd gear is performed. However, the shift-up to third gear is done when the car speed exceeds a certain value to prevent the engine from over-revving. Manually move the selector to "D" returning to normal driving condition.

1 (First gear)

Use for driving up a very steep grade or for engine braking when descending steep hills. When downshifting to "1", the transaxle will temporarily remain in second gear until the vehicle has slowed enough for low gear to engage. Do not exceed 50 km/h (30 mph) in low gear.

"1" shifts to 1st gear only. However, shift up to 2nd is performed when the car exceeds a certain speed and, as speed increases, the transaxle will shift up to 3rd gear to prevent overrevving the engine.

✻ NOTICE

- **For smooth and safe operation, depress the brake pedal when shifting from "N" (Neutral) position or "P" (Park) position to a forward or "R" (Reverse) gear.**
- **Fully depress the brake pedal in order to move the shift lever from the "P" (Park) position to any of the other positions.**
- **It is always possible to shift from "R", "N", "D", "3", "2", "1" position to "P" position. The vehicle must be fully stopped to avoid transaxle damage.**

⚠ CAUTION

- ***Shift into "R" and "P" position only when the vehicle has completely stopped.***
- ***Do not accelerate the engine in reverse or any of the forward positions with the brakes applied.***
- ***Always apply the footbrake when shifting from "P" or "N", to "R", "D","3", "2" or "1" position.***
- ***Check the automatic transaxle fluid level regularly, and add fluid as necessary.***

  See the maintenance schedule for the proper fluid recommendation.

Shift lock system (if equipped)

For your safety, the automatic transaxle has a shift lock system which prevents shifting the transaxle from P (Park) into R (Reverse) unless the brake pedal is depressed.

To shift the transaxle from P (Park) into R (Reverse):

1. Depress and hold the brake pedal.
2. Move the shift lever.

If the brake pedal is repeatedly depressed and released with the shift lever in the P (Park) position, a chattering noise near the shift lever may be heard. This is a normal condition.

⚠ WARNING

Always fully depress the brake pedal before and whilst shifting out of the P (Park) position into another position to avoid inadvertent motion of the vehicle which could injure persons in or around the car.

Good driving practices

- Never move the shift lever from P (Park) or N (Neutral) to any other position with the accelerator pedal depressed.
- Never move the shift lever into P (Park) when the vehicle is in motion.
- Be sure the car is completely stopped before you attempt to shift into R (Reverse) or D (Drive).
- Never take the car out of gear and coast down a hill. This may be extremely hazardous. Always leave the car in gear when moving.
- Do not "ride" the brakes. This can cause them to overheat and malfunction. Instead, when you are driving down a long hill, slow down and shift to a lower gear. When you do this, engine braking will help slow the car.
- Slow down before shifting to a lower gear. Otherwise, the lower gear may not be engaged.
- Always use the parking brake. Do not depend on placing the transaxle in P (Park) to keep the car from moving.
- Exercise extreme caution when driving on a slippery surface. Be especially careful when braking, accelerating or shifting gears. On a slippery surface, an abrupt change in vehicle speed can cause the drive wheels to lose traction and the vehicle to go out of control.
- Optimum vehicle performance and economy is obtained by smoothly depressing and releasing the accelerator pedal.

⚠ WARNING

- **Always buckle-up! In a collision, an unbelted occupant is significantly more likely to be seriously injured or killed than a properly belted occupant.**
- **Avoid high speeds when cornering or turning.**
- **Do not make quick steering wheel movements, such as sharp lane changes or fast, sharp turns.**
- **The risk of rollover is greatly increased if you lose control of your vehicle at highway speeds.**
- **Loss of control often occurs if two or more wheels drop off the roadway and the driver oversteers to reenter the roadway.**
- **In the event your vehicle leaves the roadway, do not steer sharply. Instead, slow down before pulling back into the travel lanes.**
- **Never exceed posted speed limits.**

⚠ WARNING

If your vehicle becomes stuck in snow, mud, sand, etc., then you may attempt to rock the vehicle free by moving it forward and backward. Do not attempt this procedure if people or objects are anywhere near the vehicle. During the rocking operation the vehicle may suddenly move forward or backward as it becomes unstuck, causing injury or damage to nearby people or objects.

Moving up a steep grade from a standing start

To move up a steep grade from a standing start, depress the brake pedal, shift the shift lever to D (Drive). Select the appropriate gear depending on load weight and steepness of the grade, and release the parking brake. Depress the accelerator gradually whilst releasing the service brakes.

BRAKE SYSTEM

Power brakes

Your vehicle has power-assisted brakes that adjust automatically through normal usage.

In the event that the power-assisted brakes lose power because of a stalled engine or some other reason, you can still stop your vehicle by applying greater force to the brake pedal than you normally would. The stopping distance, however, will be longer.

When the engine is not running, the reserve brake power is partially depleted each time the brake pedal is applied. Do not pump the brake pedal when the power assist has been interrupted.

Pump the brake pedal only when necessary to maintain steering control on slippery surfaces.

⚠ WARNING - Brakes

- **Do not drive with your foot resting on the brake pedal. This will create abnormal high brake temperatures, excessive brake lining and pad wear, and increased stopping distances.**
- **When descending a long or steep hill, shift to a lower gear and avoid continuous application of the brakes. Continuous brake application will cause the brakes to overheat and could result in a temporary loss of braking performance.**

(Continued)

(Continued)

- **Wet brakes may impair the vehicle's ability to safely slow down; the vehicle may also pull to one side when the brakes are applied. Applying the brakes lightly will indicate whether they have been affected in this way. Always test your brakes in this fashion after driving through deep water. To dry the brakes, apply them lightly whilst maintaining a safe forward speed until brake performance returns to normal.**
- **Always, confirm the position of the brake and accelerator pedal before driving. If you don't check the position of the accelerator and brake pedal before driving, you may depress the accelerator instead of the brake pedal. It may cause a serious accident.**

In the event of brake failure

If service brakes fail to operate whilst the vehicle is in motion, you can make an emergency stop with the parking brake. The stopping distance, however, will be much greater than normal.

⚠ WARNING - Parking brake

Applying the parking brake whilst the vehicle is moving at normal speeds can cause a sudden loss of control of the vehicle. If you must use the parking brake to stop the vehicle, use great caution in applying the brake.

Disc brakes wear indicator

Your vehicle has disc brakes.

When your brake pads are worn and new pads are required, you will hear a high-pitched warning sound from your front brakes or rear brakes. You may hear this sound come and go or it may occur whenever you depress the brake pedal.

Please remember that some driving conditions or climates may cause a brake squeal when you first apply (or lightly apply) the brakes. This is normal and does not indicate a problem with your brakes.

⚠ CAUTION

- ***To avoid costly brake repairs, do not continue to drive with worn brake pads.***
- ***Always replace the front or rear brake pads as pairs.***

⚠ WARNING - Brake wear

This brake wear warning sound means your vehicle needs service. If you ignore this audible warning, you will eventually lose braking performance, which could lead to a serious accident.

Rear drum brakes (if equipped)

Your rear drum brakes do not have wear indicators. Therefore, have the rear brake linings inspected if you hear a rear brake rubbing noise. Also have your rear brakes inspected each time you change or rotate your tyres and when you have the front brakes replaced.

Parking brake

Applying the parking brake

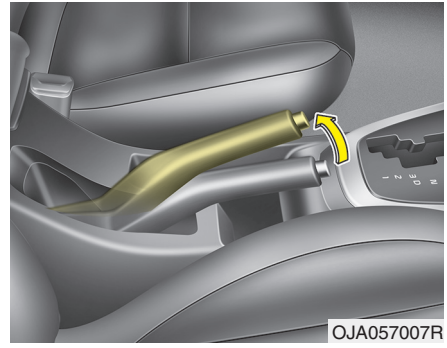

To engage the parking brake, first apply the foot brake and then pull up the parking brake lever as far as possible.

In addition it is recommended that when parking the vehicle on a incline, the shift lever should be in a low gear on manual transaxle vehicles or in the P (Park) position on automatic transaxle vehicles.

⚠ CAUTION

- ***Driving with the parking brake applied will cause excessive brake pad and brake rotor wear.***
- ***Do not operate the parking brake whilst the vehicle is moving except in an emergency situation. It could damage the vehicle system and make endanger driving safety.***

Releasing the parking brake

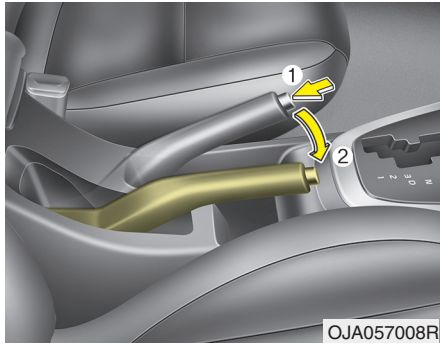

To release the parking brake, first apply the foot brake and pull up the parking brake lever slightly. Secondly depress the release button (1) and lower the parking brake lever (2) whilst holding the button.

If the parking brake does not release or does not release all the way, have the system checked by a professional workshop. Kia recommends to visit an authorised Kia dealer/service partner.

⚠ WARNING

- **To prevent unintentional movement when stopped and leaving the vehicle, do not use the gearshift lever in place of the parking brake. Set the parking brake AND make sure the gearshift lever is securely positioned in P (Park) for automatic transaxle equipped vehicles.**
- **Never allow anyone who is unfamiliar with the vehicle to touch the parking brake. If the parking brake is released unintentionally, serious injury may occur.**
- **All vehicles should always have the parking brake fully engaged when parking to avoid inadvertent movement of the vehicle which can injure occupants or pedestrians.**



Check the brake warning light by turning the ignition switch ON (do not start the engine). This light will be illuminated when the parking brake is applied with the ignition switch in the START or ON position.

Before driving, be sure the parking brake is fully released and the brake warning light is off.

If the brake warning light remains on after the parking brake is released whilst engine is running, there may be a malfunction in the brake system. Immediate attention is necessary.

If at all possible, cease driving the vehicle immediately. If that is not possible, use extreme caution whilst operating the vehicle and only continue to drive the vehicle until you can reach a safe location or repair shop.

Anti-lock brake system (ABS) (if equipped)

⚠ WARNING

ABS (or ESC) will not prevent accidents due to improper or dangerous driving manoeuvres. Even though vehicle control is improved during emergency braking, always maintain a safe distance between you and objects ahead. Vehicle speeds should always be reduced during extreme road conditions.

The braking distance for cars equipped with an anti-lock braking system (or Electronic Stability Control system) may be longer than for those without it in the following road conditions.

(Continued)

(Continued)

During these conditions the vehicle should be driven at reduced speeds:

- **Rough, gravel or snow-covered roads.**
- **With tyre chains installed.**
- **On roads where the road surface is pitted or has different surface height.**

The safety features of an ABS (or ESC) equipped vehicle should not be tested by high speed driving or cornering. This could endanger the safety of yourself or others.

The ABS continuously senses the speed of the wheels. If the wheels are going to lock, the ABS system repeatedly modulates the hydraulic brake pressure to the wheels.

When you apply your brakes under conditions which may lock the wheels, you may hear a “tik-tik” sound from the brakes, or feel a corresponding sensation in the brake pedal. This is normal and it means your ABS is active.

In order to obtain the maximum benefit from your ABS in an emergency situation, do not attempt to modulate your brake pressure and do not try to pump your brakes. Press your brake pedal as hard as possible or as hard as the situation warrants and allow the ABS to control the force being delivered to the brakes.

✻ NOTICE

A click sound may be heard in the engine compartment when the vehicle begins to move after the engine is started. These conditions are normal and indicate that the anti-lock brake system is functioning properly.

- Even with the anti-lock brake system, your vehicle still requires sufficient stopping distance. Always maintain a safe distance from the vehicle in front of you.
- Always slow down when cornering. The anti-lock brake system cannot prevent accidents resulting from excessive speeds.
- On loose or uneven road surfaces, operation of the anti-lock brake system may result in a longer stopping distance than for vehicles equipped with a conventional brake system.



W-78

⚠ CAUTION

- ***If the ABS warning light is on and stays on, you may have a problem with the ABS. In this case, however, your regular brakes will work normally.***

(Continued)

(Continued)

- *The ABS warning light will stay on for approximately 3 seconds after the ignition switch is ON. During that time, the ABS will go through self-diagnosis and the light will go off if everything is normal. If the light stays on, you may have a problem with your ABS.*

  In this case, have the system checked by a professional workshop. Kia recommends to visit an authorised Kia dealer/service partner.

⚠ CAUTION

- *When you drive on a road having poor traction, such as an icy road, and operate your brakes continuously, the ABS will be active continuously and the ABS warning light may illuminate. Pull your car over to a safe place and stop the engine.*
- *Restart the engine. If the ABS warning light is off, then your ABS system is normal. Otherwise, you may have a problem with the ABS. In this case, have the system checked by a professional workshop. Kia recommends to visit an authorised Kia dealer/service partner.*

✻ NOTICE

When you jump start your vehicle because of a drained battery, the engine may not run as smoothly and the ABS warning light may turn on at the same time. This happens because of the low battery voltage. It does not mean your ABS is malfunctioning.

- **Do not pump your brakes!**
- **Have the battery recharged before driving the vehicle.**

Electronic Stability Control (ESC) (if equipped)

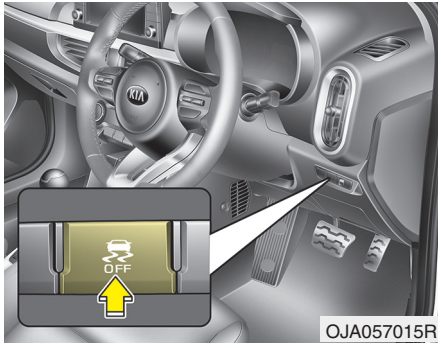

The Electronic Stability Control (ESC) system is designed to stabilize the vehicle during cornering manoeuvres. ESC checks where you are steering and where the vehicle is actually going.

ESC applies the brakes at individual wheels and intervenes in the engine management system to stabilize the vehicle.

⚠ WARNING

Never drive too fast for the road conditions or too quickly when cornering. Electronic stability Control (ESC) will not prevent accidents. Excessive speed in turns, abrupt manoeuvres and hydroplaning on wet surfaces can still result in serious accidents. Only a safe and attentive driver can prevent accidents by avoiding manoeuvres that cause the vehicle to lose traction. Even with ESC installed, always follow all the normal precautions for driving - including driving at safe speeds for the conditions.

The Electronic Stability Control (ESC) system is an electronic system designed to help the driver maintain vehicle control under adverse conditions. It is not a substitute for safe driving practices. Factors including speed, road conditions and driver steering input can all affect whether ESC will be effective in preventing a loss of control. It is still your responsibility to drive and corner at reasonable speeds and to leave a sufficient margin of safety.

When you apply your brakes under conditions which may lock the wheels, you may hear a “tik-tik” sound from the brakes, or feel a corresponding sensation in the brake pedal. This is normal and it means your ESC is active.

✻ NOTICE

A click sound may be heard in the engine compartment when the vehicle begins to move after the engine is started. These conditions are normal and indicate that the Electronic Stability Control System is functioning properly.

ESC operation

ESC ON condition

-

- When the ignition is turned ON, ESC and ESC OFF indicator lights illuminate for approximately 3 seconds, then ESC is turned on.
- Press the ESC OFF button after turning the ignition ON to turn ESC off. (ESC OFF indicator will illuminate). To turn the ESC on, press the ESC OFF button (ESC OFF indicator light will go off).
- When starting the engine, you may hear a slight ticking sound. This is the ESC performing an automatic system self-check and does not indicate a problem.

When operating

When the ESC is in operation, the ESC indicator light blinks.



- When the Electronic Stability Control is operating properly, you can feel a slight pulsation in the vehicle. This is only the effect of brake control and indicates nothing unusual.
- When moving out of the mud or driving on a slippery road, the engine rpm (revolution per minute) may not be increased even if you press the accelerator pedal deeply. This is to maintain the stability and traction of the vehicle and does not indicate a problem.

ESC OFF condition



To cancel ESC operation :

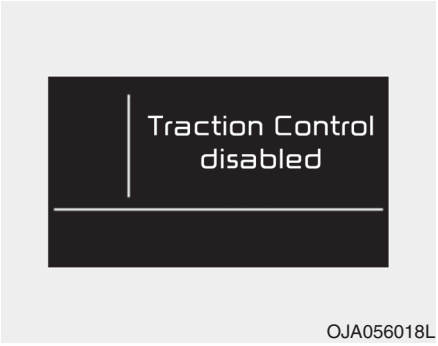

OJA056018L

• State 1

Press the ESC OFF button shortly (ESC OFF indicator light and message illuminates). At this state, the engine control function does not operate. In other words, the traction control function does not operate but only the brake control function operates.



OJA056019L

• State 2

Press the ESC OFF button for more than 3 seconds. ESC OFF indicator light and message illuminates and ESC OFF warning chime will sound. At this state, the engine control function and brake control function does not operate. In other words, the vehicle stability control function does not operate any more.

If the ignition switch is placed to the LOCK/OFF position when ESC is off, ESC remains off. Upon restarting the engine, the ESC will automatically turn on again.

Indicator light

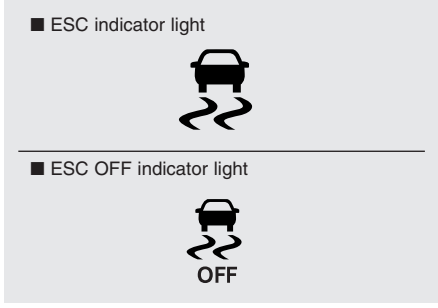

When ignition switch is turned to ON, the indicator light illuminates, then goes off if the ESC system is operating normally.

The ESC indicator light blinks whenever ESC is operating or illuminates when ESC fails to operate.

ESC OFF indicator light comes on when the ESC is turned off with the button.

⚠ CAUTION

Driving with varying tyre or wheel sizes may cause the ESC system to malfunction. When replacing tyres, make sure they are the same size as your original tyres.

⚠ WARNING

The Electronic Stability Control system is only a driving aid; use precautions for safe driving by slowing down on curved, snowy, or icy roads. Drive slowly and don't attempt to accelerate whenever the ESC indicator light is blinking, or when the road surface is slippery.

ESC OFF usage

When driving

- ESC should be turned on for daily driving whenever possible.
- To turn ESC off whilst driving, press the ESC OFF button whilst driving on a flat road surface.

Never press the ESC OFF button whilst ESC is operating (ESC indicator light blinks).

If ESC is turned off whilst ESC is operating, the vehicle may slip out of control.

✻ NOTICE

- **When operating the vehicle on a dynamometer, ensure that the ESC is turned off (ESC OFF light illuminated).**
- **Turning the ESC off does not affect ABS or brake system operation.**

⚠ WARNING

Never press the ESC OFF button whilst ESC is operating.

If the ESC is turned off whilst ESC is operating, the vehicle may go out of control.

To turn ESC off whilst driving, press the ESC OFF button whilst driving on a flat road surface.

Hill-start assist control (HAC) (if equipped)

Hill start Assist Control is a comfort function. The main intend is to prevent the vehicle from rolling backwards whilst driving off uphill on an inclined surface. HAC holds the braking pressure builtup by driver during stopping procedure for 2 seconds after releasing brake pedal.

During the pressure-hold period, the driver has enough time to press the accelerator pedal to drive off.

The braking pressure is reduced as soon as the system detects the driver's intention to drive off.

⚠ WARNING

The HAC is usually activated only for 2 seconds. The driver should be careful from the rolling backward causing the accident with behind objects or human, when the driver may feel the unintended rolling backward whilst driving off on hill due to insufficient brake hold pressure built-up by driver during stopping procedure.

✻ NOTICE

- **The HAC does not operate when the transaxle shift lever is in the P (Park) or N (Neutral) position.**
- **The HAC activates even though the ESC is off but it does not activate when the ESC has malfunctioned.**

Vehicle stability management (VSM) (if equipped)

This system provides further enhancements to vehicle stability and steering responses when a vehicle is driving on a slippery road or a vehicle detected changes in coefficient of friction between right wheels and left wheels when braking.

VSM operation

When the VSM is in operation, ESC indicator light ( ) blinks.

When the vehicle stability management is operating properly, you can feel a slight pulsation in the vehicle. This is only the effect of brake control and indicates nothing unusual.

The VSM does not operate when:

- Driving on bank road such as gradient or incline
- Driving rearward
- ESC OFF indicator light ( ) remains on the instrument cluster
- EPS indicator light remains on the instrument cluster

VSM operation off

If you press the ESC OFF button to turn off the ESC, the VSM will also cancel and the ESC OFF indicator light ( ) illuminates.

To turn on the VSM, press the button again. The ESC OFF indicator light goes out.

Malfunction indicator

The VSM can be deactivated even if you don't cancel the VSM operation by pressing the ESC OFF button. It indicates that a malfunction has been detected somewhere in the Electric Power Steering system or VSM system. If the ESC indicator light ( ) or EPS warning light remains on, have the system checked by a professional workshop.

Kia recommends to visit an authorised Kia dealer/service partner.

✻ NOTICE

- **The VSM is designed to function above approximately 15 km/h (9 mph) on curves.**
- **The VSM is designed to function above approximately 30 km/h (18 mph) when a vehicle is braking on a split-mu road. The split-mu road is made of surfaces which have different friction forces.**

⚠ WARNING

- **The Vehicle Stability Management system is not a substitute for safe driving practices but a supplementary function only. It is the responsibility of the driver to always check the speed and the distance to the vehicle ahead. Always hold the steering wheel firmly whilst driving.**
- **Your vehicle is designed to activate according to the driver's intention, even with installed VSM. Always follow all the normal precautions for driving at safe speeds for the conditions – including driving inclement weather and on a slippery road.**
- **Driving with varying tyre or wheel sizes may cause the VSM system to malfunction. When replacing tyres, make sure they are the same size as your original tyres.**

ESS : Emergency Stop Signal (if equipped)

The Emergency Stop Signal system alerts the driver behind by blinking the stop light when the vehicle suddenly stops or when the ABS activates in a stop. (The system activates when the vehicle speed is over 55km/h and the vehicle deceleration is over 7m/s² or the ABS activates when the vehicle emergency braking.)

When the vehicle speed is under 40 km/h and the ABS deactivates or the sudden stop situation is over, the stop light blinking will stop.

⚠ CAUTION

The Emergency Stop Signal system will not work if the hazard warning flasher is already on.

Good braking practices

⚠ WARNING

- **Whenever leaving vehicle or parking, always set the parking brake as far as possible and fully engage the vehicle's transaxle into the park position. Vehicles not fully engaged in park with the parking brake set are at risk for moving inadvertently and injuring yourself or others.**
- **All vehicles should always have the parking brake fully engaged when parking to avoid inadvertent movement of the car which can injure occupants or pedestrians.**

- After parking the vehicle, check to be sure the parking brake is not engaged and that the parking brake indicator light is out before driving away.
- Driving through water may get the brakes wet. They can also get wet when the car is washed. Wet brakes can be dangerous! Your car will not stop as quickly if the brakes are wet. Wet brakes may cause the car to pull to one side.

  To dry the brakes, apply the brakes lightly until the braking action returns to normal, taking care to keep the car under control at all times. If the braking action does not return to normal, stop as soon as it is safe to do so and have your vehicle inspected by a professional workshop. Kia recommends to call an authorised Kia dealer/service partner.
- Don't coast down hills with the car out of gear. This is extremely hazardous. Keep the car in gear at all times, use the brakes to slow down, then shift to a lower gear so that engine braking will help you maintain a safe speed.

- Don't "ride" the brake pedal. Resting your foot on the brake pedal whilst driving can be dangerous because it can result in the brakes overheating and losing their effectiveness. It also increases the wear of the brake components.
- If a tyre goes flat whilst you are driving, apply the brakes gently and keep the car pointed straight ahead whilst you slow down. When you are moving slowly enough for it to be safe to do so, pull off the road and stop in a safe place.
- If your car is equipped with an automatic transaxle, don't let your car creep forward. To avoid creeping forward, keep your foot firmly on the brake pedal when the car is stopped.
- Be cautious when parking on a hill. Firmly engage the parking brake and place the shift lever in P (Park). If your car is facing downhill, turn the front wheels into the kerb to help keep the car from rolling. If your car is facing uphill, turn the front wheels away from the kerb to help keep the car from rolling. If there is no kerb or if it is required by other conditions to keep the car from rolling, block the wheels.
- Under some conditions your parking brake can freeze in the engaged position. This is most likely to happen when there is an accumulation of snow or ice around or near the rear brakes or if the brakes are wet. If there is a risk that the parking brake may freeze, apply it only temporarily whilst you put the shift lever in P (Park) and block the rear wheels so the car cannot roll. Then release the parking brake.
- Do not hold the vehicle on the upgrade with the accelerator pedal. This can cause the transaxle to overheat. Always use the brake pedal or parking brake.

CRUISE CONTROL SYSTEM (IF EQUIPPED)

The cruise control system allows you to program the vehicle to maintain a constant speed without pressing the accelerator pedal.

This system is designed to function above approximately 30 km/h (20 mph).

⚠ WARNING

- **If the cruise control is left on, (CRUISE indicator light in the instrument cluster illuminated) the cruise control can be switched on accidentally. Keep the cruise control system off (CRUISE indicator light OFF) when the cruise control is not in use, to avoid inadvertently setting a speed.**
- **Use the cruise control system only when travelling on open highways in good weather.**
- **Do not use the cruise control when it may not be safe to keep the car at a constant speed, for instance, driving in heavy or varying traffic, or on slippery (rainy, icy or snow-covered) or winding roads or over 6% uphill or down-hill roads.**
- **Pay particular attention to the driving conditions whenever using the cruise control system.**

⚠ CAUTION

During cruise-speed driving of a manual transaxle vehicle, do not shift into neutral without depressing the clutch pedal, since the engine will be over-revved. If this happens, depress the clutch pedal or release the cruise control ON-OFF switch.

✻ NOTICE

During normal cruise control operation, when the SET switch is activated or reactivated after applying the brakes, the cruise control will energize after approximately 3 seconds. This delay is normal.

✻ NOTICE

To activate cruise control, depress the brake pedal at least once after turning the ignition switch to the ON position or starting the engine. This is to check if the brake switch which is important part to cancel cruise control is in normal condition.

Cruise control switch

■ Type A

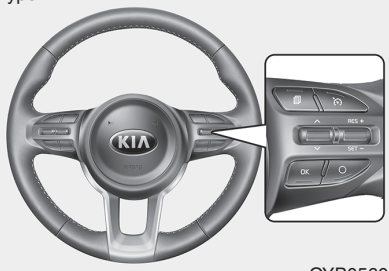

OYB056015

■ Type B

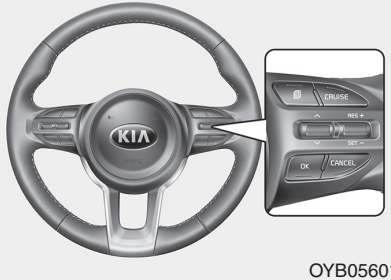

OYB056016

O / CANCEL: Cancels cruise control operation.

/ CRUISE : Turns cruise control system on or off.

RES+: Resumes or increases cruise control speed.

SET-: Sets or decreases cruise control speed.

To set cruise control speed:

■ Type A

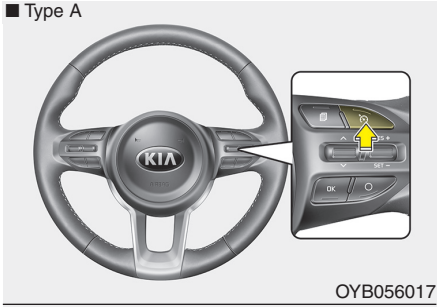

OYB056017

■ Type B

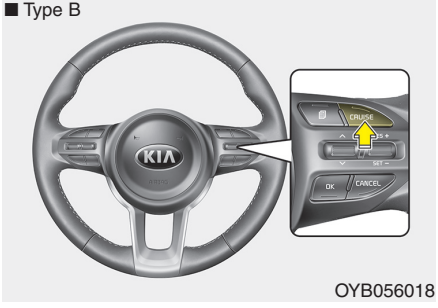

OYB056018

1. Press the cruise / CRUISE button on the steering wheel, to turn the system on. The cruise indicator light will illuminate.
2. Accelerate to the desired speed, which must be more than 30 km/h (20 mph).

✻ NOTICE - Manual transaxle

For manual transaxle vehicles, you should depress the brake pedal at least once to set the cruise control after starting the engine.

■ Type A

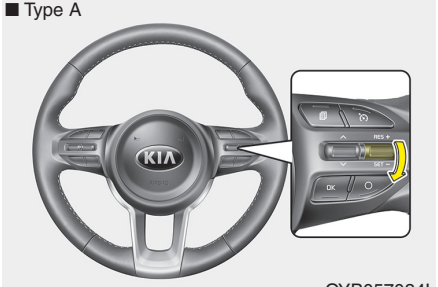

OYB057034L

■ Type B

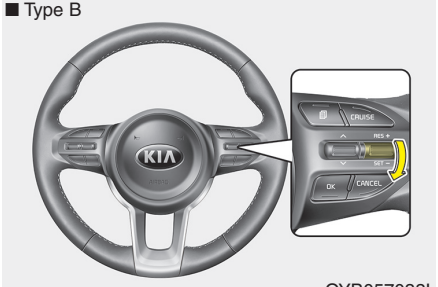

OYB057033L

3. Move the lever down (to SET-), and release it at the desired speed. The cruise set indicator light will illuminate. Release the accelerator pedal at the same time. The desired speed will automatically be maintained.

On a steep grade, the vehicle may slow down or speed up slightly whilst going downhill.

To increase cruise control set speed:

■ Type A

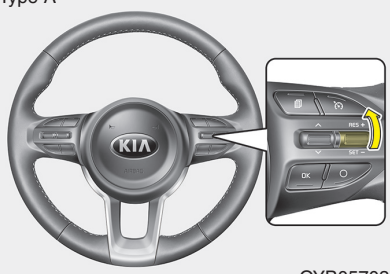

OYB057037L

■ Type B

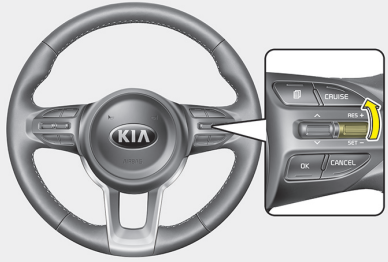

OYB057036L

Follow either of these procedures:

- Move the lever up (to RES+) and hold it. Your vehicle will accelerate. Release the lever at the speed you want.
- Move the lever up (to RES+) and release it immediately. The cruising speed will increase by 2.0 km/h (1.2 mph) each time you move the lever up (to RES+) in this manner.

To decrease the cruising speed:

■ Type A

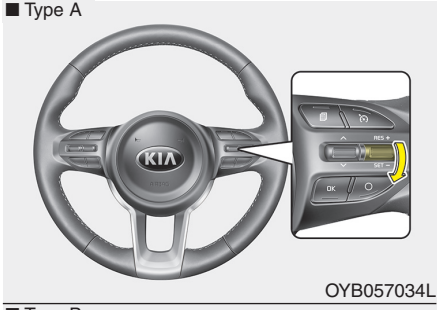

OYB057034L

■ Type B

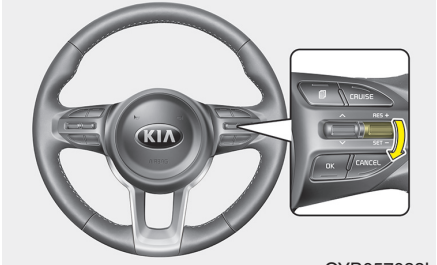

OYB057033L

Follow either of these procedures:

- Move the lever down (to SET-) and hold it. Your vehicle will gradually slow down. Release the lever at the speed you want to maintain.
- Move the lever down (to SET-) and release it immediately. The cruising speed will decrease by 2.0 km/h (1.2 mph) each time you move the lever down (to SET-) in this manner.

To temporarily accelerate with the cruise control on:

If you want to speed up temporarily when the cruise control is on, depress the accelerator pedal. Increased speed will not interfere with cruise control operation or change the set speed.

To return to the set speed, take your foot off the accelerator pedal.

To cancel cruise control, do one of the following:

■ Type A

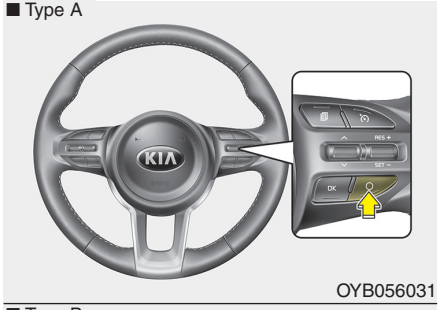

OYB056031

■ Type B

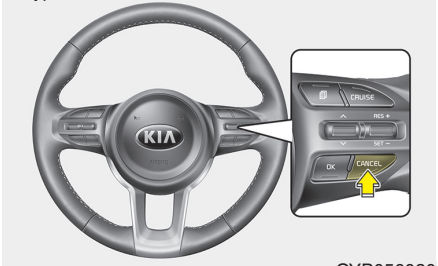

OYB056030

- Depress the brake pedal.
- Depress the clutch pedal if equipped with a manual transaxle.
- Shift into N (Neutral) if equipped with an automatic transaxle.

- Press the O/CANCEL switch located on the steering wheel.
- Decrease the vehicle speed lower than the memory speed by 20 km/h (12 mph).
- Decrease the vehicle speed to less than approximately 30 km/h (20 mph).

Each of these actions will cancel cruise control operation (the cruise set *indicator light will go off), but it will not turn the system off. If you wish to resume cruise control operation, move up the lever (to RES+) located on your steering wheel. You will return to your previously preset speed.*

To resume cruising speed at more than approximately 30 km/h (20 mph):

■ Type A

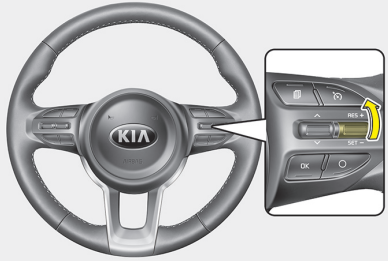

OYB057037L

■ Type B

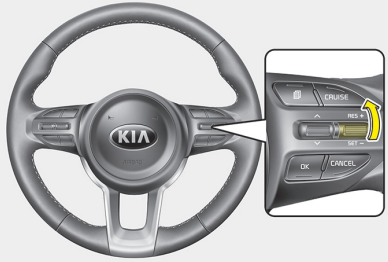

OYB057036L

If any method other than the cruise /CRUISE button was used to cancel cruising speed and the system is still activated, the most recent set speed will automatically resume when you move the lever up (to RES+).

It will not resume, however, if the vehicle speed has dropped below approximately 30 km/h (20 mph).

To turn cruise control off, do one of the following:

- Press the cruise / CRUISE button (the cruise indicator light will be turn off).
- Turn the ignition off.

Both of these actions cancel cruise control operation. If you want to resume cruise control operation, repeat the steps provided in "To set cruise control speed" on the previous page.

SPEED LIMIT CONTROL SYSTEM (IF EQUIPPED)

You can set the speed limit when you do not want to drive over a specific speed.

If you drive over the preset speed limit, the warning system operates (set speed limit will blink and chime will sound) until the vehicle speed returns within the speed limit.

✻ NOTICE

Whilst speed limit control is in operation, the cruise control system cannot be activated.

Speed limit control switch

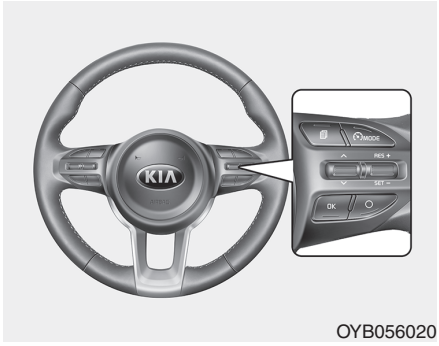

OYB056020

O: Cancels set speed limit.

MODE : Turns speed limit control system on or off.

RES+: Resumes or increases speed limit control speed.

SET-: Sets or decreases speed limit control speed.

To set speed limit :

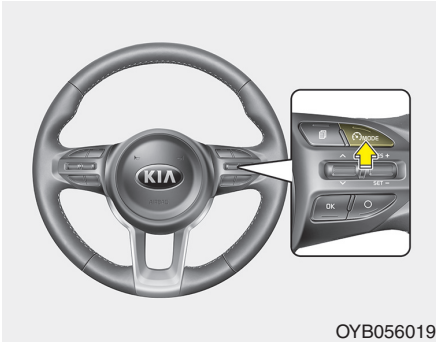

OYB056019

1. Press the speed limit MODE button twice on the steering wheel, to turn the system on.

The speed limit indicator light will illuminate.

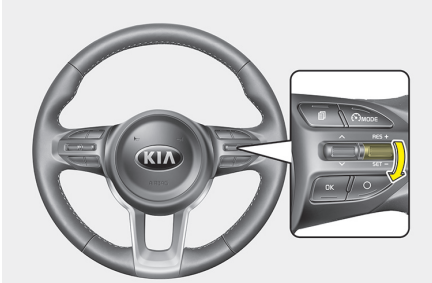

OYB057035L

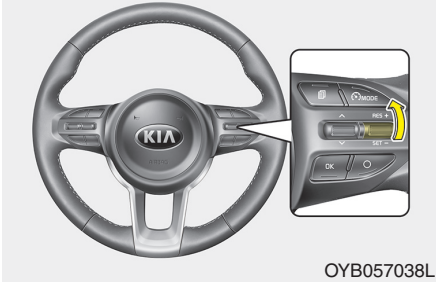

OYB057038L

2. Move the lever down (to SET-).
3. Move the lever up (to RES+) or down (to SET-), and release it at the desired speed. Move the lever up (to RES+) or down (to SET-) and hold it. The speed will increase or decrease by 5 km/h (3 mph).



OJA046143

The set speed limit will be displayed.



OJA046143

To drive over the preset speed limit you must depress hard on the accelerator pedal (more than approximately 80%) until the kick down mechanism works with a clicking noise. Then the set speed limit will blink and chime will sound until you return the vehicle speed within the speed limit.

✻ NOTICE

- **Depressing the accelerator pedal less than approximately 50%, the vehicle will not speed over the preset speed limit but maintain the vehicle speed within the speed limit.**
- **A clicking noise heard from the kick down mechanism by depressing the accelerator pedal fully is a normal condition.**

To turn off the speed limit control, do one of the following:

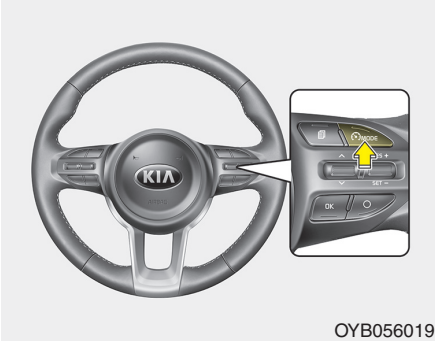

OYB056019

- Press the speed limit MODE switch once again.
- Turn the ignition off.

If you press the O switch once, the set speed limit will cancel, but it will not turn the system off. If you wish to reset the speed limit, move the lever up (to RES+) or down (to SET-) to the desired speed.

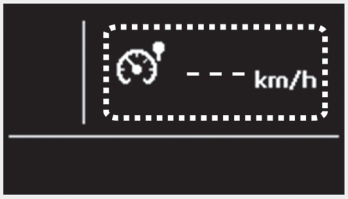

OJA046162

⚠ CAUTION

The "---" indicator will blink if there is a problem with speed limit control system.

If this occurs, have the system checked by a professional workshop. Kia recommends to visit an authorised Kia dealer/service partner.

RADAR TYPE AUTONOMOUS EMERGENCY BRAKING (IF EQUIPPED)

The AEB system is to reduce or to avoid accident risk. It recognizes the distance from the vehicle ahead through the sensors (i.e. radar), and, if necessary, warns the driver or applies emergency braking of accident risk with the warning message or the warning alarms.

✻ Radar type AEB system does not operate for pedestrians in front.

⚠ WARNING

Take the following precautions when using the Autonomous Emergency Braking (AEB):

- **This system is only a supplemental system and it is not intended to, nor does it replace the need for extreme care and attention of the driver. The sensing range and objects detectable by the sensors are limited. Pay attention to the road conditions at all times.**
- **NEVER drive too fast in accordance with the road conditions or whilst cornering.**
- **Always drive cautiously to prevent unexpected and sudden situations from occurring. AEB does not stop the vehicle completely and does not avoid collisions.**

System setting and activation

System setting

The driver can activate the AEB by placing the ignition switch to the ON position and by selecting 'User Settings', 'Driving Assist', and 'Autonomous Emergency Braking System'. The AEB deactivates, when the driver cancels the system setting.



The warning light illuminates on the LCD display, when you cancel the AEB system. It illuminates even with the ESC (Electronic Stability Control) state 2 OFF. The driver can monitor the AEB ON/OFF status on the LCD display. When the warning light remains ON with the AEB activated, have the system checked by a professional workshop. Kia recommends to visit an authorised Kia dealer/service partner.

The driver can select the initial warning activation time in the User Settings and Driving Assist in the instrument cluster LCD display. The options for the initial Forward Collision Warning include the following:

- EARLY - When this condition is selected, the initial Forward Collision Warning is activated earlier than normal. If the “EARLY” warning seems to be too sensitive, change it to “NORMAL”. If the vehicle ahead suddenly stops, the warning may seem to be late even if the “EARLY” condition was selected.
- NORMAL - When this condition is selected, the initial Forward Collision Warning is activated normally.
- LATE - When this condition is selected, the initial Forward Collision Warning is activated later than normal. Select this condition only when traffic is light and you are driving at low speed.

Prerequisite for activation

The AEB gets ready to be activated, when the AEB is selected on the LCD display, and when the following prerequisites are satisfied.

- The ESC is activated.
- The driving speed is over 10km/h. (However, AEB is activated within certain driving speed.)
- When recognizing the vehicle in front. (However, AEB does not activate according to conditions in front and vehicle systems, but it notices only certain warnings.)

⚠ WARNING

- **The AEB automatically activates upon placing the ignition switch to the ON position. The driver can deactivate the AEB by canceling the system setting on the LCD display.**
- **The AEB automatically deactivates upon cancelling the ESC, even with the AEB system ON, and the driver will not be able to activate the AEB on the LCD display. In this case, the AEB warning light will illuminate, but it does not indicate a malfunction.**
- **Set or cancel AEB with controlling switches on steering wheel after stopping the vehicle in the safe place for your safety.**

AEB warning message and system control

The AEB produces warning messages and warning alarms in accordance with the collision risk levels of followings like vehicle's sudden braking in front or lack of vehicle to vehicle distance. Also, it controls the brakes in accordance with the collision risk levels.

Forward Warning (1st warning)



OJA056020L

The warning message appears on the LCD display with the warning alarms.

Collision Warning (2nd warning)



OJA056021L

- The warning message appears on the LCD display with a warning alarm.
- The vehicle will reduce its speed to a certain limit.
  - The brake activates gradually for vehicles ahead.
  - The brake control activates within an arranged limit to ease the impact from a collision.

Emergency braking (3rd warning)



OJA056022L

- The warning message appears on the LCD display with a warning alarm.
- The vehicle will reduce its speed to a certain limit.
  - The brake control activates within an arranged limit to ease the impact from a collision. Maximum brake control is activated just before the collision.

Brake operation

- In an urgent situation, the braking system enters into the ready status for prompt reaction against the driver's depressing the brake pedal.
- The AEB provides additional braking power for optimum braking performance, when the driver depresses the brake pedal.
- The braking control is automatically deactivated, when the driver sharply depresses the accelerator pedal, or when the driver abruptly operates the steering wheel.
- The braking control is automatically cancelled, when risk factors disappear.

⚠ CAUTION

The driver should always pay great caution to vehicle operation, even though there is no warning message or warning alarm.

⚠ WARNING

The AEB cannot avoid all collisions. The AEB might not completely stop the vehicle before collision, due to ambient, weather and road conditions. The driver has the responsibility to drive safely and control the vehicle.

⚠ WARNING

The AEB operates in accordance with the risk levels, such as the distance from the vehicle in front, the speed of the vehicle in front, and the driver's vehicle operation.

For the system to operate, do not attempt risky driving.

Sensor to detect the distance from the vehicle in front (front radar)



The sensor is to maintain a certain distance from the vehicle in front. However, the smudged sensor with foreign substances, such as snow and rain, adversely affects the sensing performance. It may even temporarily cancel the AEB. Always keep the sensor clean.

Warning message and warning light

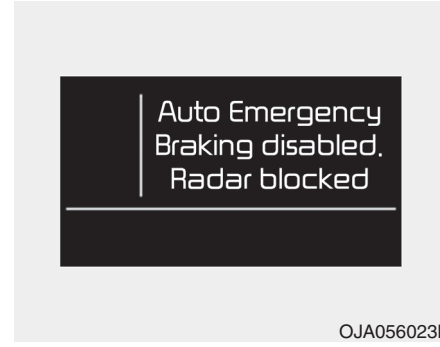

When the sensor cover is smudged with the foreign substances, such as snow or rain, the AEB operation may temporarily stop. In this case, the warning message appears to warn the driver.

This is not a malfunction with the AEB. To operate the AEB again, remove the foreign substances.

If the sensor is smudged entirely or no object is sensed (in an open terrain etc.), The AEB might not operate normally.

✻ NOTICE

- **Do not install any accessories, such as license plate molding or sticker, on the sensor area. Nor arbitrarily replace the bumper. Those may adversely affect the sensing performance.**
- **Always keep the sensor/bumper area clean.**
- **Use only soft clothes to wash the vehicle. Also, do not spray highly-pressurized water on the sensor installed on the bumper.**
- **Be careful not to apply unnecessary force on the frontal sensor area. When the sensor moves out of the correct position due to external force, the system may not normally operate even without the warning light or message. In this case, have the vehicle inspected by a professional workshop. Kia recommends to visit an authorised Kia dealer/service partner.**

(Continued)

(Continued)

- **Use only the genuine Kia sensor cover. Do not arbitrarily apply paint on the sensor cover.**
- **Do not arbitrarily remove or impact the radar components.**
- **If the audio volume is too high, you may not be able to hear a warning alarm from the AEB system.**

System malfunction

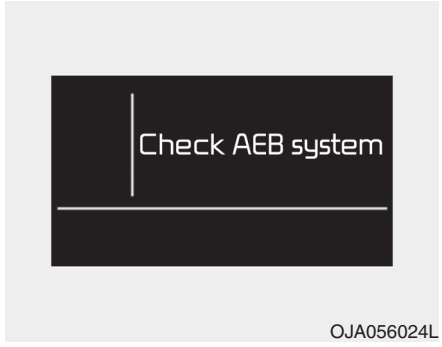

OJA056024L

- When the AEB is not working properly, the AEB warning light ( ) will illuminate and the warning message will appear for a few seconds. After the message disappears, the master warning light ( ) will illuminate. In this case, have the vehicle inspected by a professional workshop. Kia recommends to visit an authorised Kia dealer/service partner.
- The AEB warning message may appear along with the illumination of the ESC warning light.

⚠ WARNING

- **The AEB is only a supplemental system for the driver's convenience. The driver should hold the responsibility to control the vehicle operation. Do not solely depend on the AEB system. Rather, maintain a safe braking distance, and, if necessary, depress the brake pedal to lower the driving speed.**
- **The AEB may unnecessarily produce the warning message and the warning alarms. Also, due to the sensing limitation, the AEB may not produce the warning message and the warning alarm at all.**

(Continued)

(Continued)

- **When there is a malfunction with the AEB, the braking control does not operate upon detecting a collision risk even with other braking systems normally operating.**
- **The AEB operates only for the vehicle in front, whilst driving forward. It does not operate for any animals or vehicles in the opposite direction.**
- **The AEB does not recognize the vehicle, which horizontally drives across the crossroad, or the vehicle, which is parked in the horizontal direction.**

(Continued)

(Continued)

- **If the vehicle ahead suddenly stops, there is a risk of collision. The driver must always pay caution in case of dangerous situations.**
- **In case of sudden braking when the AEB Is activated, objects inside the vehicle may move and injure the occupants.**
- **When the driver depresses the brake in a risk of collision, the AEB system may not operate.**
- **The AEB may not operate due to driving or traffic condition, weather, and road condition.**
- **The AEB may not operate in all vehicles.**

Limitation of the system

The AEB is an assistant system for a driver in a certain risky driving condition and it does not take every responsibility for all risks from driving condition.

The AEB monitors the driving situations through the radar. Thus, for a situation out of the sensing range, the AEB may not normally operate. The driver should pay great caution in the following situations. The AEB operation may be limited.

Recognizing vehicles

- Sensor or sensor cover is contaminated with foreign substances.
- It heavily rains or snows.
- There is interruption by electric waves.
- There is severe irregular reflection from the radar.
- The vehicle in front has a narrow body. (i.e. motor cycle)
- In situations when there is severe radar reflection, the AEB may not operate normally. (parking lot, iron bridge, etc.)
- Special vehicles (bus, truck, constructive vehicle, trailer, etc.) in which radars are difficult to detect, the AEB may not operate normally.
- The vehicle in front is a special vehicle, such as a heavily-loaded truck or a trailer.
- The vehicle driving is unstable.
- The radar sensor recognition is limited.
- Driving on unpaved and uneven road surfaces, or through sudden gradient changes.
- In construction zones or on railroad tracks, or there are metallic objects on the road.
- Driving indoors such as in an underground parking lot.
- Driving in an underground parking lot.
- Entering a tunnel or tollgate.
- There are materials which easily reflect radar signals. (guardrails, approaching vehicles, etc.)

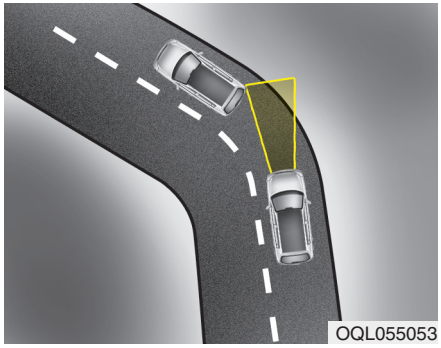
OQL055053

- Driving on a curve

The AEB performance decreases whilst driving on a curve. The AEB may not recognize the vehicle in front even in the same lane. It may unnecessarily produce the warning message and the warning alarm, or it may not produce the warning message and the warning alarm at all.

Whilst driving on a curve, pay great caution, and, if necessary, depress the brake pedal.

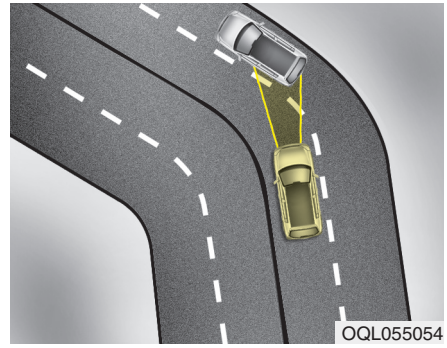
OQL055054

Whilst driving on a curve, the AEB may recognize the vehicle in front in the next lane. Pay great caution, and, if necessary, depress the brake pedal.

Or, depress the accelerator pedal to maintain the driving speed. Always, take a look around the vehicle for your safety.

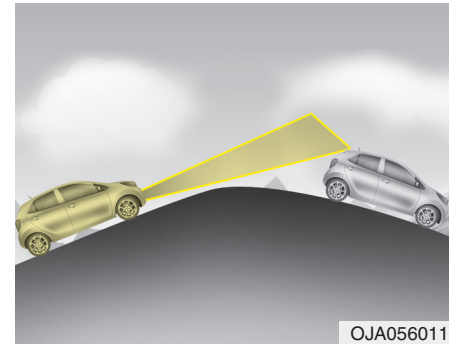
OJA056011

- Driving on a slope

The AEB performance decreases whilst driving upward or downward on a slope, not recognizing the vehicle in front in the same lane. It may unnecessarily produce the warning message and the warning alarm, or it may not produce the warning message and the warning alarm at all.

When the AEB suddenly recognizes the vehicle in front whilst passing over a slope, you may experience sharp deceleration.

Always keep your eyes forward whilst driving upward or downward on a slope, and, if necessary, depress the brake pedal.

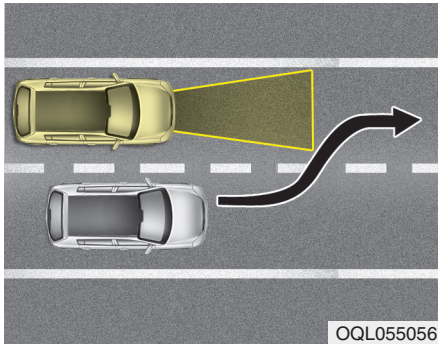

- Changing lanes

Even though the vehicle in the next lane enters into your lane, it may not be recognized by the AEB, until it enters the AEB sensing range.

Especially when the vehicle in the next lane abruptly enters into your lane, it is more likely not be recognized. Always pay great attention.

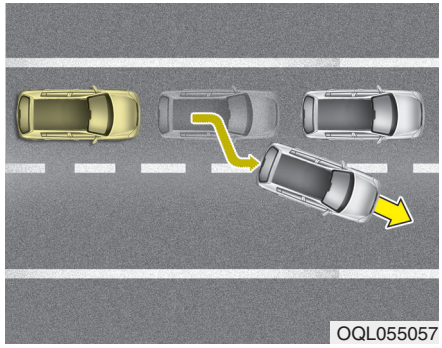

When the stopped vehicle in front gets out of the lane, it may not be recognized by your AEB. Always pay great attention.

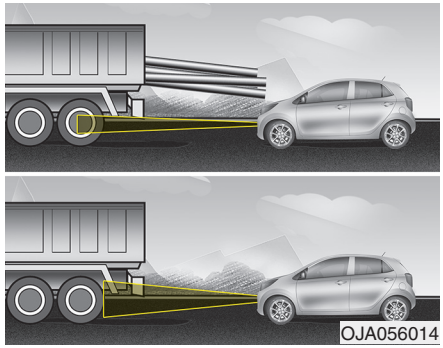

- Recognizing the vehicle

When the vehicle in front has heavy loading extended rearward, or when the vehicle in front has higher ground clearance, it may induce a hazardous situation.

⚠ WARNING

- **Cancel the AEB in the User Settings on the LCD display, before towing another vehicle. Whilst towing, the brake application may adversely affect your vehicle safety.**
- **Pay great caution to the vehicle in front, when it has heavy loading extended rearward, or when it has higher ground clearance.**
- **The sensor only detects vehicles, not carts, bicycles, motorcycles, luggage bags, or strollers.**
- **The AEB does not operate in a certain situation. Thus, never test-operate the AEB against a vehicle or an object. It may cause a severe injury or even death.**

✻ NOTICE

The system may temporarily cancel due to the strong electric waves.

ECONOMICAL OPERATION

Your vehicle's fuel economy depends mainly on your style of driving, where you drive and when you drive.

Each of these factors affects how many kilometers (miles) you can get from a litre (gallon) of fuel. To operate your vehicle as economically as possible, use the following driving suggestions to help save money in both fuel and repairs:

- Drive smoothly. Accelerate at a moderate rate. Don't make "jackrabbit" starts or full-throttle shifts and maintain a steady cruising speed. Don't race between stoplights. Try to adjust your speed to the traffic so you don't have to change speeds unnecessarily. Avoid heavy traffic whenever possible.

  Always maintain a safe distance from other vehicles so you can avoid unnecessary braking. This also reduces brake wear.
- Drive at a moderate speed. The faster you drive, the more fuel your vehicle uses. Driving at a moderate speed, especially on the highway, is one of the most effective ways to reduce fuel consumption.
- Don't "ride" the brake pedal. This can increase fuel consumption and also increase wear on these components. In addition, driving with your foot resting on the brake pedal may cause the brakes to overheat, which reduces their effectiveness and may lead to more serious consequences.
- Take care of your tyres. Keep them inflated to the recommended pressure. Incorrect inflation, either too much or too little, results in unnecessary tyre wear. Check the tyre pressures at least once a month.
- Be sure that the wheels are aligned correctly. Improper alignment can result from hitting kerbs or driving too fast over irregular surfaces. Poor alignment causes faster tyre wear and may also result in other problems as well as greater fuel consumption.
- Keep your car in good condition. For better fuel economy and reduced maintenance costs, maintain your car in accordance with the maintenance schedule in section 8. If you drive your car in severe conditions, more frequent maintenance is required (see section 8 for details).
- Keep your car clean. For maximum service, your vehicle should be kept clean and free of corrosive materials. It is especially important that mud, dirt, ice, etc. not be allowed to accumulate on the underside of the car. This extra weight can result in increased fuel consumption and also contribute to corrosion.
- Travel lightly. Don't carry unnecessary weight in your car. Weight reduces fuel economy.
- Don't let the engine idle longer than necessary. If you are waiting (and not in traffic), turn off your engine and restart only when you're ready to go.

- Remember, your vehicle does not require extended warm-up. After the engine has started, allow the engine to run for 10 to 20 seconds prior to placing the vehicle in gear. In very cold weather, however, give your engine a slightly longer warm-up period.
- Don't "lug" or "over-rev" the engine. Lugging is driving too slowly in too high a gear resulting in the engine bucking. If this happens, shift to a lower gear. Over-revving is racing the engine beyond its safe limit. This can be avoided by shifting at the recommended speeds.
- Use your air conditioning sparingly. The air conditioning system is operated by engine power so your fuel economy is reduced when you use it.
- Open windows at high speeds can reduce fuel economy.
- Fuel economy is less in crosswinds and headwinds. To help offset some of this loss, slow down when driving in these conditions.

Keeping a vehicle in good operating condition is important both for economy and safety. Therefore, have the system serviced by a professional workshop. Kia recommends to visit an authorised Kia dealer/service partner.

⚠ WARNING
- Engine off during motion

Never turn the engine off to coast down hills or anytime the vehicle is in motion. The power steering and power brakes will not function properly without the engine running. Instead, keep the engine on and downshift to an appropriate gear for engine braking effect. In addition, turning off the ignition whilst driving could engage the steering wheel lock resulting in loss of vehicle steering which could cause serious injury or death.

SPECIAL DRIVING CONDITIONS

Hazardous driving conditions

When hazardous driving conditions are encountered such as water, snow, ice, mud, sand, or similar hazards, follow these suggestions:

- Drive cautiously and allow extra distance for braking.
- Avoid sudden braking or steering.
- When braking with non-ABS brakes pump the brake pedal with a light up-and-down motion until the vehicle is stopped.

⚠ WARNING - ABS

Do not pump the brake pedal on a vehicle equipped with ABS.

- If stalled in snow, mud, or sand, use second gear. Accelerate slowly to avoid spinning the drive wheels.
- Use sand, rock salt, tyre chains, or other non-slip material under the drive wheels to provide traction when stalled in ice, snow, or mud.

⚠ WARNING - Downshifting

Downshifting with an automatic transaxle, whilst driving on slippery surfaces can cause an accident. The sudden change in tyre speed could cause the tyres to skid. Be careful when downshifting on slippery surfaces.

Rocking the vehicle

If it is necessary to rock the vehicle to free it from snow, sand, or mud, first turn the steering wheel right and left to clear the area around your front wheels. Then, shift back and forth between 1st (First) and R (Reverse) in vehicles equipped with a manual transaxle or R (Reverse) and any forward gear in vehicles equipped with an automatic transaxle. Do not race the engine, and spin the wheels as little as possible. If you are still stuck after a few tries, have the vehicle pulled out by a tow vehicle to avoid engine overheating and possible damage to the transaxle.

⚠ CAUTION

Prolonged rocking may cause engine over-heating, transaxle damage or failure, and tyre damage.

⚠ WARNING
- Spinning tyres

Do not spin the wheels, especially at speeds more than 56 km/h (35 mph). Spinning the wheels at high speeds when the vehicle is stationary could cause a tyre to overheat which could result in tyre damage that may injure bystanders.

✻ NOTICE

The ESC system (if equipped) should be turned OFF prior to rocking the vehicle.

⚠ WARNING

If your vehicle becomes stuck in snow, mud, sand, etc., then you may attempt to rock the vehicle free by moving it forward and backward. Do not attempt this procedure if people or objects are anywhere near the vehicle. During the rocking operation the vehicle may suddenly move forward of backward as it becomes unstuck, causing injury or damage to nearby people or objects.

Smooth cornering



Avoid braking or gear changing in corners, especially when roads are wet. Ideally, corners should always be taken under gentle acceleration. If you follow these suggestions, tyre wear will be held to a minimum.

Driving at night


OMC035004

Because night driving presents more hazards than driving in the daylight, here are some important tips to remember:

- Slow down and keep more distance between you and other vehicles, as it may be more difficult to see at night, especially in areas where there may not be any street lights.
- Adjust your mirrors to reduce the glare from other driver's headlights.
- Keep your headlights clean and properly aimed on vehicles not equipped with the automatic headlight aiming feature. Dirty or improperly aimed headlights will make it much more difficult to see at night.
- Avoid staring directly at the headlights of oncoming vehicles. You could be temporarily blinded, and it will take several seconds for your eyes to readjust to the darkness.

Driving in the rain


1VQA3003

Rain and wet roads can make driving dangerous, especially if you're not prepared for the slick pavement. Here are a few things to consider when driving in the rain:

- A heavy rainfall will make it harder to see and will increase the distance needed to stop your vehicle, so slow down.
- Keep your windscreen wiping equipment in good shape. Replace your windscreen wiper blades when they show signs of streaking or missing areas on the windscreen.

- If your tyres are not in good condition, making a quick stop on wet pavement can cause a skid and possibly lead to an accident. Be sure your tyres are in good shape.
- Turn on your headlights to make it easier for others to see you.
- Driving too fast through large puddles can affect your brakes. If you must go through puddles, try to drive through them slowly.
- If you believe you may have gotten your brakes wet, apply them lightly whilst driving until normal braking operation returns.

Driving in flooded areas

Avoid driving through flooded areas unless you are sure the water is no higher than the bottom of the wheel hub. Drive through any water slowly. Allow adequate stopping distance because brake performance may be affected.

After driving through water, dry the brakes by gently applying them several times whilst the vehicle is moving slowly.

Driving off-road

Drive carefully off-road because your vehicle may be damaged by rocks of roots of trees. Become familiar with the off-road conditions where you are going to drive before you begin driving.

Highway driving

Tyres

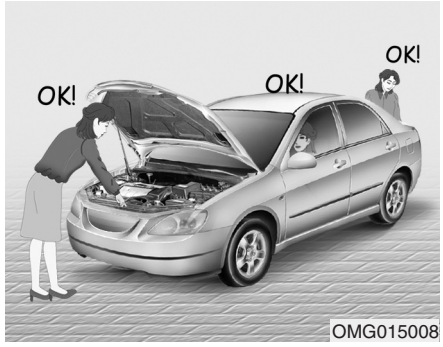

Adjust the tyre inflation pressures to specification. Low tyre inflation pressures will result in overheating and possible failure of the tyres.

Avoid using worn or damaged tyres which may result in reduced traction or tyre failure.

✻ NOTICE

Never exceed the maximum tyre inflation pressure shown on the tyres.

⚠ WARNING

- **Underinflated or overinflated tyres can cause poor handling, loss of vehicle control, and sudden tyre failure leading to accidents, injuries, and even death. Always check tyres for proper inflation before driving. For proper tyre pressures, refer to "Tyres and wheels" in section 9.**
- **Driving on tyres with no or insufficient tread is dangerous. Worn-out tyres can result in loss of vehicle control, collisions, injury, and even death. Worn-out tyres should be replaced as soon as possible and should never be used for driving. Always check the tyre tread before driving your car. For further information and tread limits, refer to "Tyres and wheels" in section 8.**

Fuel, engine coolant and engine oil

High speed travel consumes more fuel than urban motoring. Do not forget to check both engine coolant and engine oil.

Drive belt

A loose or damaged drive belt may result in overheating of the engine.

WINTER DRIVING



More severe weather conditions of winter result in greater wear and other problems. To minimise winter driving problem, you should follow these suggestions:

Snowy or icy conditions

To drive your vehicle in deep snow, it may be necessary to use snow tyres or to install tyre chains on your tyres. If snow tyres are needed, it is necessary to select tyres equivalent in size and type of the original equipment tyres. Failure to do so may adversely affect the safety and handling of your car. Furthermore, speeding, rapid acceleration, sudden brake applications, and sharp turns are potentially very hazardous practices.

During deceleration, use engine braking to the fullest extent. Sudden brake applications on snowy or icy roads may cause skids to occur. You need to keep sufficient distance between the vehicle in operation in front and your vehicle. Also, apply the brake gently. It should be noted that installing tyre chains on the tyre will provide a greater driving force, but will not prevent side skids.

✻ NOTICE

Tyre chains are not legal in all countries. Check the country laws before fitting tyre chains.

Snow tyres

If you mount snow tyres on your vehicle, make sure they are radial tyres of the same size and load range as the original tyres. Mount snow tyres on all four wheels to balance your vehicle's handling in all weather conditions. Keep in mind that the traction provided by snow tyres on dry roads may not be as high as your vehicle's original equipment tyres. You should drive cautiously even when the roads are clear. Check with the tyre dealer for maximum speed recommendations.

⚠ WARNING - Snow tyre size

Snow tyres should be equivalent in size and type to the vehicle's standard tyres. Otherwise, the safety and handling of your vehicle may be adversely affected.

Do not install studded tyres without first checking local, state and municipal regulations for possible restrictions against their use.

Tyre chains

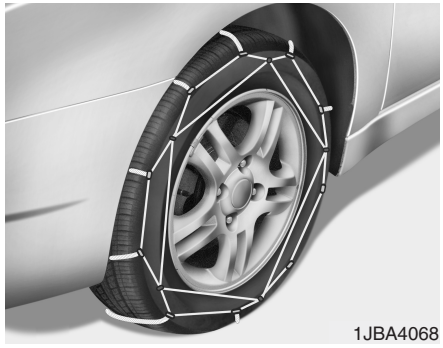

Since the sidewalls of radial tyres are thinner, they can be damaged by mounting some types of snow chains on them. Therefore, the use of snow tyres is recommended instead of snow chains. Do not mount tyre chains on vehicles equipped with aluminum wheels; snow chains may cause damage to the wheels. If snow chains must be used, use wire-type chains with a thickness of less than 15 mm (0.59 in). Damage to your vehicle caused by improper snow chain use is not covered by your vehicle manufacturers warranty.

Install tyre chains only on the front tyres.

⚠ CAUTION

- ***Make sure the snow chains are the correct size and type for your tyres. Incorrect snow chains can cause damage to the vehicle body and suspension and may not be covered by your vehicle manufacturer warranty. Also, the snow chain connecting hooks may be damaged from contacting vehicle components causing the snow chains to come loose from the tyre. Make sure the snow chains are SAE class "S" certified.***
- ***Always check chain installation for proper mounting after driving approximately 0.5 to 1 km (0.3 to 0.6 miles) to ensure safe mounting. Retighten or remount the chains if they are loose.***

(Continued)

(Continued)

- ***Even with the appropriate chain installed, do not make a full turn(turn the steering wheel fully to one side) when driving the vehicle. (If you are making a full turn, drive with the speed below 10km/h.)***
- ***If your vehicle has 185/55R15 or 195/45R16 size tyres do not use tyre chain; they can damage your vehicle (wheel, suspension and body).***

Chain installation

When installing chains, follow the manufacturer's instructions and mount them as tightly as you can. Drive slowly with chains installed. If you hear the chains contacting the body or chassis, stop and tighten them. If they still make contact, slow down until it stops. Remove the chains as soon as you begin driving on cleared roads.

⚠ WARNING
- Mounting chains

When mounting snow chains, park the vehicle on level ground away from traffic. Turn on the vehicle Hazard Warning flashers and place a triangular emergency warning device behind the vehicle if available. Always place the vehicle in P (Park), apply the parking brake and turn off the engine before installing snow chains.

⚠ WARNING - Tyre chains

- **The use of chains may adversely affect vehicle handling.**
- **Do not exceed 30 km/h (20 mph) or the chain manufacturer's recommended speed limit, whichever is lower.**
- **Drive carefully and avoid bumps, holes, sharp turns, and other road hazards, which may cause the vehicle to bounce.**
- **Avoid sharp turns or locked-wheel braking.**

⚠ CAUTION

- ***Chains that are the wrong size or improperly installed can damage your vehicle's brake lines, suspension, body and wheels.***
- ***Stop driving and retighten the chains any time you hear them hitting the vehicle.***

Use high quality ethylene glycol coolant

Your vehicle is delivered with high quality ethylene glycol coolant in the cooling system. It is the only type of coolant that should be used because it helps prevent corrosion in the cooling system, lubricates the water pump and prevents freezing. Be sure to replace or replenish your coolant in accordance with the maintenance schedule in section 8.

Before winter, have your coolant tested to assure that its freezing point is sufficient for the temperatures anticipated during the winter.

Check battery and cables

Winter puts additional burdens on the battery system. Visually inspect the battery and cables as described in section 8. Have the level of charge in your battery checked by a professional workshop. Kia recommends to visit an authorised Kia dealer/service partner.

Change to "winter weight" oil if necessary

In some climates it is recommended that a lower viscosity "winter weight" oil be used during cold weather. See section 9 for recommendations. If you aren't sure what weight oil you should use, Kia recommends to consult an authorised Kia dealer/service partner.

Check spark plugs and ignition system

Inspect your spark plugs as described in section 8 and replace them if necessary. Also check all ignition wiring and components to be sure they are not cracked, worn or damaged in any way.

To keep locks from freezing

To keep the locks from freezing, squirt an approved de-icer fluid or glycerine into the key opening. If a lock is covered with ice, squirt it with an approved de-icing fluid to remove the ice. If the lock is frozen internally, you may be able to thaw it out by using a heated key. Handle the heated key with care to avoid injury.

Use approved window washer anti-freeze in system

To keep the water in the window washer system from freezing, add an approved window washer anti-freeze solution in accordance with instructions on the container. Window washer anti-freeze is available from an authorised Kia dealer/service partner and most auto parts outlets.

Do not use engine coolant or other types of anti-freeze as these may damage the paint finish.

Don't let your parking brake freeze

Under some conditions your parking brake can freeze in the engaged position. This is most likely to happen when there is an accumulation of snow or ice around or near the rear brakes or if the brakes are wet. If there is a risk the parking brake may freeze, apply it only temporarily whilst you put the shift lever in P (automatic transaxle) or in first or reverse gear (manual transaxle) and block the rear wheels so the vehicle cannot roll. Then release the parking brake.

Don't let ice and snow accumulate underneath

Under some conditions, snow and ice can build up under the fenders and interfere with the steering. When driving in severe winter conditions where this may happen, you should periodically check underneath the car to be sure the movement of the front wheels and the steering components is not obstructed.

Carry emergency equipment

Depending on the severity of the weather, you should carry appropriate emergency equipment. Some of the items you may want to carry include tyre chains, tow straps or chains, flashlight, emergency flares, sand, shovel, jumper cables, window scraper, gloves, ground cloth, coveralls, blanket, etc.

VEHICLE WEIGHT

This section will guide you in the proper loading of your vehicle, to keep your loaded vehicle weight within its design rating capability. Properly loading your vehicle will provide maximum return of the vehicle design performance. Before loading your vehicle, familiarize yourself with the following terms for determining your vehicle's weight ratings, from the vehicle's specifications and the certification label:

Base kerb weight

This is the weight of the vehicle including a full tank of fuel and all standard equipment. It does not include passengers, cargo, or optional equipment.

Vehicle kerb weight

This is the weight of your new vehicle when you picked it up from your dealer plus any aftermarket equipment.

Cargo weight

This figure includes all weight added to the Base Kerb Weight, including cargo and optional equipment.

GAW (Gross axle weight)

This is the total weight placed on each axle (front and rear) - including vehicle kerb weight and all payload.

GAWR (Gross axle weight rating)

This is the maximum allowable weight that can be carried by a single axle (front or rear). These numbers are shown on the certification label.

The total load on each axle must never exceed its GAWR.

GVW (Gross vehicle weight)

This is the Base Kerb Weight plus actual Cargo Weight plus passengers.

GVWR (Gross vehicle weight rating)

This is the maximum allowable weight of the fully loaded vehicle (including all options, equipment, passengers and cargo). The GVWR is shown on the certification label located on the driver's (or front passenger's) door sill.

Overloading

⚠ WARNING - Vehicle weight

The gross axle weight rating (GAWR) and the gross vehicle weight rating (GVWR) for your vehicle are on the certification label attached to the driver's (or front passenger's) door. Exceeding these ratings can cause an accident or vehicle damage. You can calculate the weight of your load by weighing the items (and people) before putting them in the vehicle. Be careful not to overload your vehicle.

Loading Your Vehicle - For Australia

Certification Label (Type A) - if equipped

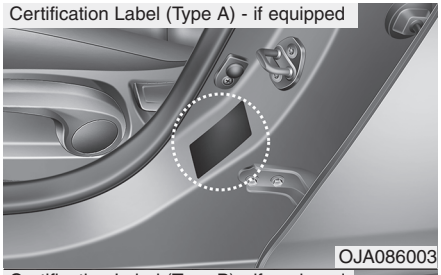

OJA086003

Certification Label (Type B) - if equipped

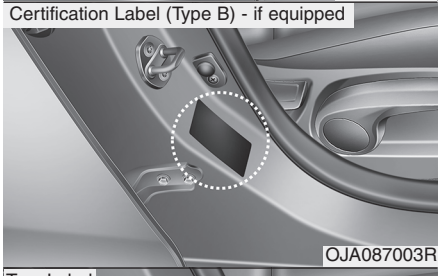

OJA087003R

Tyre Label

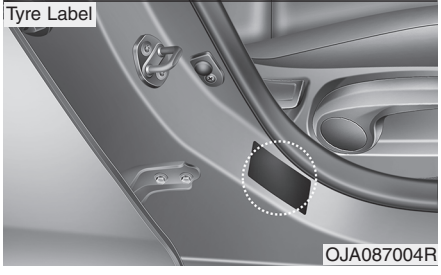

OJA087004R

The Certification/Tyre label is found on the front edge of the RH (or LH) “B” pillar. The label shows the size of your original tyres and inflation pressures needed to obtain the gross weight capacity of your vehicle.

This is called the GVWR (Gross Vehicle Weight Rating). The GVWR includes the weight of the vehicle, all occupants, fuel and cargo. The Certification/Tyre label also tells you the maximum weights for the front and rear axles, called Gross Axle Weight Rating (GAWR).

Never exceed the GVWR for your vehicle, or the Gross Axle Weight Rating (GAWR) for either the front or rear axle. And, if you do have a heavy load, you should spread it out.

✻ NOTICE

Your warranty does not cover parts or components that fail because of overloading.

⚠ CAUTION

Do not load your vehicle any heavier than the GVWR or the maximum front and rear GAWRs. If you do, change to the vehicle may occur, or it can change the way your vehicle handles. These could cause you to lose control. Also, overloading can shorten the life of your vehicle.

What to do in an emergency

Road warning 7-2
- Hazard warning flasher 7-2

In case of an emergency whilst driving 7-3
- If the engine stalls at a crossroad or crossing. 7-3
- If you have a flat tyre whilst driving. 7-3
- If engine stalls whilst driving 7-3

If the engine will not start 7-4
- If engine doesn't turn over or turns over slowly 7-4
- If engine turns over normally but does not start 7-4

Emergency starting 7-5
- Jump starting 7-5
- Push-starting 7-7

If the engine overheats. 7-8

Tyre Pressure Monitoring System (TPMS) 7-9

If you have a flat tyre (with spare tyre) 7-14
- Jack and tools 7-14
- Removing and storing the spare tyre 7-15
- Changing tyres. 7-16
- Jack label 7-23
- EC Declaration of Conformity for Jack 7-24

If you have a flat tyre (with Tyre Mobility Kit) (Type A). 7-25
- Introduction 7-26
- Components of the Tyre Mobility Kit (TMK) 7-27
- Using the Tyre Mobility Kit 7-28
- Distributing the sealant. 7-29
- Checking the tyre inflation pressure 7-30
- Notes on the safe use of the Tyre Mobility Kit 7-31
- Technical Data 7-32

If you have a flat tyre (with Tyre Mobility Kit) (Type B). 7-33
- Introduction 7-34
- Components of the Tyre Mobility Kit (TMK) 7-36
- Using the Tyre Mobility Kit 7-37
- Distributing the sealant. 7-40
- Checking the tyre inflation pressure 7-40
- Notes on the safe use of the Tyre Mobility Kit 7-42
- Technical Data 7-43

Towing 7-44
- Towing service 7-44
- Removable towing hook 7-45
- Emergency towing. 7-45

Emergency Commodity 7-49
- Fire extinguisher 7-49
- First aid kit. 7-49
- Triangle reflector. 7-49
- Tyre pressure gauge 7-49

ROAD WARNING

Hazard warning flasher

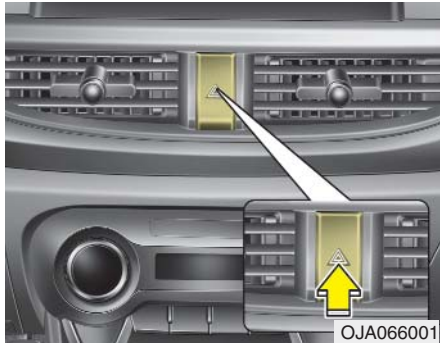

The hazard warning flasher serves as a warning to other drivers to exercise extreme caution when approaching, overtaking, or passing your vehicle.

It should be used whenever emergency repairs are being made or when the vehicle is stopped near the edge of a roadway.

Depress the flasher switch with the ignition switch in any position. The flasher switch is located in the centre console switch panel. All turn signal lights will flash simultaneously.

- The hazard warning flasher operates whether your vehicle is running or not.
- The turn signals do not work when the hazard flasher is on.
- Care must be taken when using the hazard warning flasher whilst the vehicle is being towed.

IN CASE OF AN EMERGENCY WHILST DRIVING

If the engine stalls at a cross-road or crossing

- If the engine stalls at a crossroad or crossing, set the shift lever in the N (Neutral) position and then push the vehicle to a safe place.
- If your vehicle has a manual transaxle not equipped with a ignition lock switch, the vehicle can move forward by shifting to the 2 (second) or 3 (third) gear and then turning the starter without depressing the clutch pedal.

If you have a flat tyre whilst driving

If a tyre goes flat whilst you are driving:

1. Take your foot off the accelerator pedal and let the vehicle slow down whilst driving straight ahead. Do not apply the brakes immediately or attempt to pull off the road as this may cause a loss of control. When the vehicle has slowed down to such a speed that it is safe to do so, brake carefully and pull off the road. Drive off the road as far as possible and park on a firm level ground. If you are on a divided highway, do not park in the median area between the two traffic lanes.
2. When the vehicle is stopped, turn on your emergency hazard flashers, set the parking brake and put the transaxle in P (automatic transaxle) or reverse (manual transaxle).
3. Have all passengers get out of the vehicle. Be sure they all get out on the side of the vehicle that is away from traffic.
4. When changing a flat tyre, follow the instruction provided later in this section.

If engine stalls whilst driving

1. Reduce your speed gradually, keeping a straight line. Move cautiously off the road to a safe place.
2. Turn on your emergency flashers.
3. Try to start the engine again. If your vehicle does not start, consult a professional workshop. Kia recommends to consult an authorised Kia dealer/service partner.

IF THE ENGINE WILL NOT START

If engine doesn't turn over or turns over slowly

1. If your vehicle has an automatic transaxle, be sure the shift lever is in N (Neutral) or P (Park) and the emergency brake is set.
2. Check the battery connections to be sure they are clean and tight.
3. Turn on the interior light. If the light dims or goes out when you operate the starter, the battery is discharged.
4. Check the starter connections to be sure they are securely tightened.
5. Do not push or pull the vehicle to start it. See instructions for "Jump starting".

⚠ WARNING

If the engine will not start, do not push or pull the vehicle to start it. This could result in a collision or cause other damage. In addition, push or pull starting may cause the catalytic converter to be overloaded and create a fire hazard.

If engine turns over normally but does not start

1. Check the fuel level.
2. With the ignition switch in the LOCK position, check all connectors at the ignition coils and spark plugs. Reconnect any that may be disconnected or loose.
3. Check the fuel line in the engine compartment.
4. If the engine still does not start, call a professional workshop. Kia recommends to call an authorised Kia dealer/service partner.

EMERGENCY STARTING

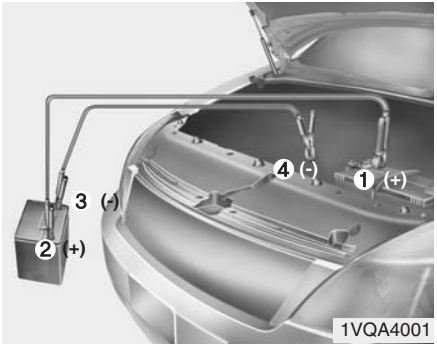

Connect cables in numerical order and disconnect in reverse order.

Jump starting

Jump starting can be dangerous if done incorrectly. Therefore, to avoid harm to yourself or damage to your vehicle or battery, follow the jump starting procedures. If in doubt, we strongly recommend that you have a competent technician or towing service jump start your vehicle.

⚠ CAUTION

Use only a 12-volt jumper system. You can damage a 12-volt starting motor, ignition system, and other electrical parts beyond repair by use of a 24-volt power supply (either two 12-volt batteries in series or a 24-volt motor generator set).

⚠ WARNING - Battery

Never attempt to check the electrolyte level of the battery as this may cause the battery to rupture or explode causing serious injury.

⚠ WARNING - Battery

- **Keep all flames or sparks away from the battery. The battery produces hydrogen gas which may explode if exposed to flame or sparks.**

  If these instructions are not followed exactly, serious personal injury and damage to the vehicle may occur! If you are not sure how to follow this procedure, seek qualified assistance. Automobile batteries contain sulfuric acid. This is poisonous and highly corrosive. When jump starting, wear protective glasses and be careful not to get acid on yourself, your clothing or on the vehicle.

(Continued)

(Continued)

- **Do not attempt to jump start the vehicle if the discharged battery is frozen or if the electrolyte level is low; the battery may rupture or explode.**
- **Do not allow the (+) and (-) jumper cables to touch. It may cause sparks.**
- **The battery may rupture or explode when you jump start with a low or frozen battery.**

Jump starting procedure

1. Make sure the booster battery is 12-volt and that its negative terminal is grounded.
2. If the booster battery is in another vehicle, do not allow the vehicles come in contact.
3. Turn off all unnecessary electrical loads.
4. Connect the jumper cables in the exact sequence shown in the illustration. First connect one end of a jumper cable to the positive terminal of the discharged battery (1), then connect the other end to the positive terminal on the booster battery (2).

   Proceed to connect one end of the other jumper cable to the negative terminal of the booster battery (3), then the other end to a solid, stationary, metallic point (for example, the engine lifting bracket) away from the battery (4). Do not connect it to or near any part that moves when the engine is cranked.

Do not allow the jumper cables to contact anything except the correct battery terminals or the correct ground. Do not lean over the battery when making connections.

⚠ CAUTION - Battery cables

Do not connect the jumper cable from the negative terminal of the booster battery to the negative terminal of the discharged battery. This can cause the discharged battery to overheat and crack, releasing battery acid.

Make sure to connect one end of the jumper cable to the negative terminal of the booster battery, and the other end to a metallic point, far away from the battery.

5. Start the engine of the vehicle with the booster battery and let it run at 2,000 rpm, then start the engine of the vehicle with the discharged battery.

If the cause of your battery discharging is not apparent, have the system checked by a professional workshop. Kia recommends to visit an authorised Kia dealer/service partner.

Push-starting

Your manual transaxle-equipped vehicle should not be push-started because it might damage the emission control system.

Vehicles equipped with automatic transaxle cannot be push-started.

Follow the directions in this section for jump-starting.

⚠ WARNING

Never tow a vehicle to start it because the sudden surge forward when the engine starts could cause a collision with the tow vehicle.

IF THE ENGINE OVERHEATS

If your temperature gauge indicates overheating, you will experience a loss of power, or hear loud pinging or knocking, the engine is probably too hot. If this happens, you should:

1. Pull off the road and stop as soon as it is safe to do so.
2. Place the shift lever in P (automatic transaxle) or neutral (manual transaxle) and set the parking brake. If the air conditioning is on, turn it off.
3. If engine coolant is running out under the vehicle or steam is coming out from the bonnet, stop the engine. Do not open the bonnet until the coolant has stopped running or the steaming has stopped. If there is no visible loss of engine coolant and no steam, leave the engine running and check to be sure the engine cooling fan is operating. If the fan is not running, turn the engine off.
4. Check to see if the water pump drive belt is missing. If it is not missing, check to see that it is tight.

   If the drive belt seems to be satisfactory, check for coolant leaking from the radiator, hoses or under the vehicle. (If the air conditioning had been in use, it is normal for cold water to be draining from it when you stop).

⚠ WARNING

Whilst the engine is running, keep hair, hands and clothing away from moving parts such as the fan and drive belts to prevent injury.

5. If the water pump drive belt is broken or engine coolant is leaking out, stop the engine immediately and call a professional workshop. Kia recommends to call an authorised Kia dealer/service partner.

⚠ WARNING

Do not remove the radiator cap when the engine is hot. This can allow coolant to blow out of the opening and cause serious burns.

6. If you cannot find the cause of the overheating, wait until the engine temperature has returned to normal. Then, if coolant has been lost, carefully add coolant to the reservoir to bring the fluid level in the reservoir up to the halfway mark.
7. Proceed with caution, keeping alert for further signs of overheating. If overheating happens again, call a professional workshop. Kia recommends to call an authorised Kia dealer/service partner.

⚠ CAUTION

- ***Serious loss of coolant indicates there is a leak in the cooling system. In this case, have the system checked by a professional workshop. Kia recommends to visit an authorised Kia dealer/service partner.***
- ***When the engine overheats from low engine coolant, suddenly adding engine coolant may cause cracks in the engine. To prevent damage, add engine coolant slowly in small quantities.***

TYRE PRESSURE MONITORING SYSTEM (TPMS) (IF EQUIPPED)



Low tyre pressure telltale (1) /
TPMS SET switch(2)

■ System Overview

The tyre pressure monitoring system (TPMS) senses change in radius of the tyre. If the tyre pressure decreases below the recommended pressure, the system warning light will be illuminated.

For the system to function properly, it is the driver's responsibility to set the system by following accurate procedure and set current tyre pressure.

The warning light will illuminate on the cluster when one or more of your tyres is under-inflated after the TPMS is set.

The warning light will also illuminate to warn the driver of system malfunction.

Please refer to the above image (1) for further information.

■ TPMS Setting

The driver can set the TPMS by following procedures below:

1) Inflate all tyres to the recommended pressure.
2) Start the engine, make sure the vehicle is not moving, and press the TPMS switch (2) right side on the driver's seat for over 3 seconds.
3) Check if the ( ) warning indicator blinks for 4 seconds.



OJA066023

4) Check if following message appears on the cluster (if equipped).

❈ If the warning light does not blink or the message does not pop up, perform the process again from 2).

For recommended tyre pressure of this vehicle, refer to chapter 9 “Tyre and wheels ” or the tyre pressure label on the driver’s door.

For proper function of the TPMS, the driver must set the system in following situations.

❈ Situation requiring TPMS setting

- If the tyre or wheel is repaired or replaced
- If the tyre or wheel is repositioned.
- If the tyre pressure is adjusted.
- If the low pressure light is illuminated.
- If suspension or ABS has been replaced.

⚠ CAUTION

If the system is set without adjusting tyre pressure, false alarm could occur or the telltale will not be displayed even though the vehicle is significantly under-inflated.

Make sure all tyres are properly adjusted to the recommended pressure when setting.

If the system is not set even in required situations, false alarm could occur or the telltale will not be displayed even though the vehicle is significantly under-inflated.

The system will not be set if you press the SET switch (2) whilst driving. Make sure to stop the vehicle and press the switch (2) for over 3 seconds.

- ***Be sure the tyre is cold before inflating the pressure.***

  A cold tyre means the vehicle has been sitting for 3 hours or driven within 1.6km (1mile).



OJA066022

■ Indication of Low Tyre Pressure

The ( ) warning light will illuminate when an under-inflated tyre is indicated. In certain types, the above message might be displayed on the cluster.

If the warning light illuminates, reduce your speed, avoid hard cornering and rapid braking. Have your vehicle inspected by a professional workshop. Kia recommends to visit an authorised Kia dealer/service partner.

Check the pressure of all tyres and inflate to the proper pressure according to procedures, and if required, replace or repair the tyres.

If you cannot reach a close service station, stop the vehicle at a safe place, check all tyres and operate the TPMS setting procedure. If you are unable to adjust the tyre pressure, use the repair tools to repair or change to spare tyre and contact a professional workshop. Kia recommends to call an authorised Kia dealer/service partner.

You may not be able to identify low tyre pressure visually. Use precise tools to measure and adjust tyre pressure.
Please note that a tyre that is hot due to prolonged driving, therefore will have high pressure. We recommend you to measure and adjust the tyre pressure after the vehicle has driven for less than 1.6km (1mile) within 3 hours.

⚠ CAUTION

- ***The indicator may remain illuminated after changing to a spare tyre, because radius of spare tyre is different. Be sure to change to a regular tyre.***
- ***For safe driving, please note that the TPMS is not a substitute for proper tyre maintenance. It is the driver's responsibility to maintain correct tyre pressure, and all tyres should be checked monthly to maintain the recommended pressure.***
- ***The warning light may illuminate if the system is not set in required situations.***

(Continued)

(Continued)

- *In cold weather, the low tyre pressure warning light may illuminate even if the tyre was adjusted to the proper pressure. It does not mean your TPMS in malfunctioning because the decreased temperature leads to a lowering of tyre pressure. Check the tyres and adjust to the recommended pressure.*
- *System performance may reduce in the following situations.*
  - *Improper system setting*
  - *Using tyres on the market (Original tyre recommended)*
  - *Driving on snowy, slippery, or unpaved roads*
  - *Hard cornering, rapid accelerating and braking repeatedly*
  - *Driving too slow or fast*
  - *If the vehicle is overloaded*
  - *If a spare tyre or snow chain is installed*

⚠ WARNING

- **Driving with an under-inflated tyre causes the tyre to overheat and lead to tyre failure. It also reduces tyre tread life, handling of the vehicle, braking ability, and fuel efficiency, causing instability of the vehicle. In this case, contact professional workshop to maintain proper tyre pressure. Kia recommends to contact an authorised Kia dealer/service partner.**
- **Sudden damage to the tyre caused by external factors may not be indicated immediately. If the vehicle is unstable, immediately remove your foot off the accelerator pedal, move the vehicle to a safe position for inspection.**

■ Tyre Pressure Monitoring System malfunction

The TPMS malfunction indicator will illuminate ( ) after it blinks for approximately 1 minute when there is a problem with the Tyre Pressure Monitoring System. This sequence will continue upon subsequent vehicle start-ups as long as the malfunction exists.

If the indicator remains illuminated or illuminates even after TPMS setting, have the system checked by a professional workshop. Kia recommends to visit an authorised Kia dealer/service partner.

⚠ WARNING

- **If there is a malfunction with the TPMS, low tyre pressure will not be indicated. In this case, have the system serviced by a professional workshop. Kia recommends to visit an authorised Kia dealer/service partner.**

(Continued)

(Continued)

- **If the system does not work due to TPMS removal or installation of related parts with different specification, it might be a problem when the vehicle is being regularly inspected.**
- **When repairing TPMS related parts, be sure to replace them to parts with original specification or those which satisfy the TPMS regulation.**
  - **TPMS related parts : tyre, wheel, ABS unit, suspension**

⚠ WARNING - FOR EUROPE

Do not modify the vehicle. It may interfere with the TPMS function.

- **All vehicles sold in the EUROPE market during below period must be equipped with TPMS.**
  - **New model vehicle : Nov. 1, 2012 ~**
  - **Current model vehicle : Nov. 1, 2014~(Based on vehicle registrations)**

■ Reference : Indicator Light Status

Status	Symbol
Low Pressure	 Illuminates
System Malfunction	 Illuminates after blinking (60 seconds)
Setting	 - Turns off after blinking (4 seconds)

IF YOU HAVE A FLAT TYRE (WITH SPARE TYRE, IF EQUIPPED)

Jack and tools



The jack, jack handle, wheel lug nut wrench are stored in the luggage compartment.

Pull up the luggage box cover to reach this equipment.

(1) Jack handle

(2) Jack

(3) Wheel lug nut wrench

Jacking instructions

The jack is provided for emergency tyre changing only.

To prevent the jack from “rattling” whilst the vehicle is in motion, store it properly.

Follow jacking instructions to reduce the possibility of personal injury.

⚠ WARNING - Changing tyres

- **Never attempt vehicle repairs in the traffic lanes of a public road or highway.**
- **Always move the vehicle completely off the road and onto the shoulder before trying to change a tyre. The jack should be used on firm level ground. If you cannot find a firm level place off the road, call a towing service company for assistance.**

(Continued)

(Continued)

- **Be sure to use the correct front and rear jacking positions on the vehicle; never use the bumpers or any other part of the vehicle for jacking support.**
- **The vehicle can roll off the jack causing serious injury or death.**
- **Do not get under a vehicle that is supported by a jack.**
- **Do not start or run the engine whilst the vehicle is on the jack.**
- **Do not allow anyone remain in the vehicle whilst it is on the jack.**
- **Make sure any children present are in a secure place away from the road and from the vehicle to be raised with the jack.**

Removing and storing the spare tyre



Turn the tyre hold-down wing bolt counterclockwise.

Store the tyre in the reverse order of removal.

To prevent the spare tyre and tools from “rattling” whilst the vehicle is in motion, store them properly.



If it is hard to loosen the tyre hold-down wing bolt by hand, you can loosen it easily using the jack handle.

1. Put the jack handle (1) inside of the tyre hold-down wing bolt.
2. Turn the tyre hold-down wing bolt counterclockwise with the jack handle.

⚠ WARNING

Ensure the spare tyre retainer is properly aligned with the centre of the spare tyre to prevent the spare tyre from “rattling”.

Otherwise, it may cause the spare tyre to fall off the carrier and lead to an accident.

Changing tyres

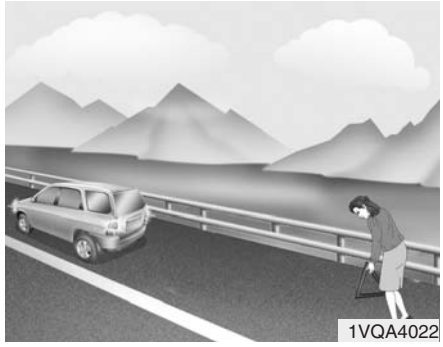

1. Park on a level surface and apply the parking brake firmly.
2. Shift the shift lever into R (Reverse) with manual transaxle or P (Park) with automatic transaxle.
3. Activate the hazard warning flasher.



4. Remove the wheel lug nut wrench, jack, jack handle, and spare tyre from the vehicle.
5. Block both the front and rear of wheel that is diagonally opposite the jack position.

⚠ WARNING - Changing a tyre

- **To prevent vehicle movement whilst changing a tyre, always set the parking brake fully, and always block the wheel diagonally opposite the wheel being changed.**
- **We recommend that the wheels of the vehicle be chocked, and that no person remain in a vehicle that is being jacked.**



6. Loosen the wheel lug nuts counterclockwise one turn each, but do not remove any nut until the tyre has been raised off the ground.

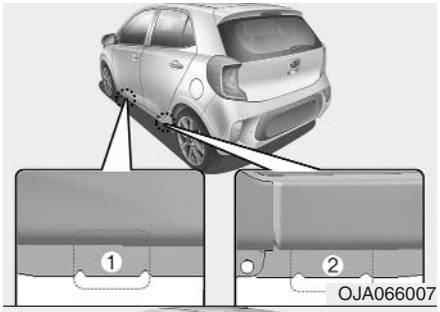

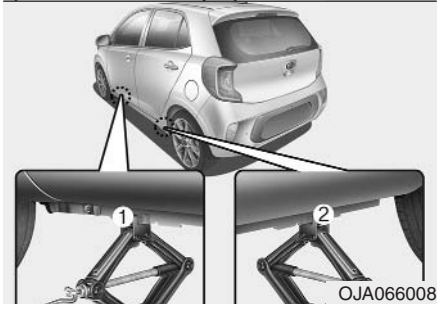

7. Place the jack at the front(1) or rear(2) jacking position closest to the tyre you are changing. Place the jack at the designated locations under the frame. The jacking positions are plates welded to the frame with two tabs and a raised dot to index with the jack.

⚠ WARNING - Jack location

To reduce the possibility of injury, be sure to use only the jack provided with the vehicle and in the correct jack position; never use any other part of the vehicle for jack support.

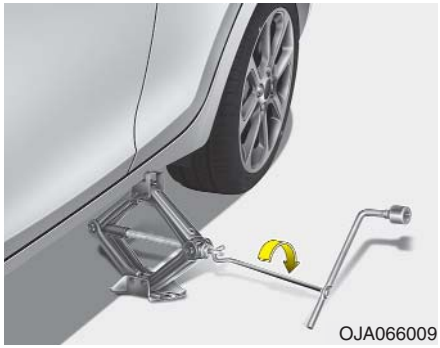
OJA066009

8. Insert the jack handle into the jack and turn it clockwise, raising the vehicle until the tyre just clears the ground. This measurement is approximately 30 mm (1.2 in). Before removing the wheel lug nuts, make sure the vehicle is stable and that there is no chance for movement or slippage.

9. Loosen the wheel nuts and remove them with your fingers. Slide the wheel off the studs and lay it flat so it cannot roll away. To put the wheel on the hub, pick up the spare tyre, line up the holes with the studs and slide the wheel onto them.

   If this is difficult, tip the wheel slightly and get the top hole in the wheel lined up with the top stud. Then jiggle the wheel back and forth until the wheel can be slid over the other studs.

⚠ WARNING

Wheels may have sharp edges. Handle them carefully to avoid possible severe injury. Before putting the wheel into place, be sure that there is nothing on the hub or wheel (such as mud, tar, gravel, etc.) that interferes with the wheel from fitting solidly against the hub.

If there is, remove it. If there is not good contact on the mounting surface between the wheel and hub, the wheel nuts could come loose and cause the loss of a wheel. Loss of a wheel may result in loss of control of the vehicle. This may cause serious injury or death.

10. To reinstall the wheel, hold it on the studs, put the wheel nuts on the studs and tighten them finger tight. Jiggle the tyre to be sure it is completely seated, then tighten the nuts as much as possible with your fingers again.
11. Lower the vehicle to the ground by turning the wheel nut wrench counterclockwise.



OYB066008

Then position the wrench as shown in the drawing and tighten the wheel nuts. Be sure the socket is seated completely over the nut. Do not stand on the wrench handle or use an extension pipe over the wrench handle. Go around the wheel tightening every other nut until they are all tight. Then double-check each nut for tightness. After changing wheels, have the system checked by a professional workshop. Kia recommends to visit an authorised Kia dealer/service partner.

Wheel nut tightening torque:

Steel wheel & aluminum alloy wheel:
11~13kgf·m (79~94lbf·ft)

If you have a tyre gauge, remove the valve cap and check the air pressure. If the pressure is lower than recommended, drive slowly to the nearest service station and inflate to the correct pressure. If it is too high, adjust it until it is correct. Always reinstall the valve cap after checking or adjusting tyre pressure. If the cap is not replaced, air may leak from the tyre. If you lose a valve cap, buy another and install it as soon as possible.

After you have changed wheels, always secure the flat tyre in its place and return the jack and tools to their proper storage locations.

⚠ CAUTION

Your vehicle has metric threads on the wheel studs and nuts. Make certain during wheel removal that the same nuts that were removed are reinstalled - or, if replaced, that nuts with metric threads and the same chamfer configuration are used. Installation of a non-metric thread nut on a metric stud or vice-versa will not secure the wheel to the hub properly and will damage the stud so that it must be replaced.

Note that most lug nuts do not have metric threads. Be sure to use extreme care in checking for thread style before installing aftermarket lug nuts or wheels.

If in doubt, consult a professional workshop. Kia recommends to consult an authorised Kia dealer/service partner.

⚠ WARNING - Wheel studs

If the studs are damaged, they may lose their ability to retain the wheel. This could lead to the loss of the wheel and a collision resulting in serious injuries.

To prevent the jack, jack handle, wheel lug nut wrench and spare tyre from rattling whilst the vehicle is in motion, store them properly.

⚠ WARNING - Inadequate spare tyre pressure

Check the inflation pressures as soon as possible after installing the spare tyre. Adjust it to the specified pressure, if necessary. Refer to "Tyres and wheels" in chapter 9.

Important - use of compact spare tyre (if equipped)

Your vehicle is equipped with a compact spare tyre. This compact spare tyre takes up less space than a regular-size tyre. This tyre is smaller than a conventional tyre and is designed for temporary use only.

⚠ CAUTION

- ***You should drive carefully when the compact spare is in use. The compact spare should be replaced by the proper conventional tyre and rim at the first opportunity.***
- ***The operation of this vehicle is not recommended with more than one compact spare tyre in use at the same time.***

⚠ WARNING

The compact spare tyre is for emergency use only. Do not operate your vehicle on this compact spare at the speed over 80 km/h (50 mph). The original tyre should be repaired or replaced as soon as possible to avoid failure of the spare possibly leading to personal injury or death.

The compact spare should be inflated to 420 kPa (60 psi).

✻ NOTICE

Check the inflation pressure after installing the spare tyre. Adjust it to the specified pressure, as necessary.

When using a compact spare tyre, observe the following precautions:

- Under no circumstances should you exceed 80 km/h (50 mph); a higher speed could damage the tyre.
- Ensure that you drive slowly enough to avoid all hazards. Any road hazard, such as a pothole or debris, could seriously damage the compact spare.
- Any continuous road use of this tyre could result in tyre failure, loss of vehicle control, and possible personal injury.
- Do not exceed the vehicle's maximum load rating or the load-carrying capacity shown on the sidewall of the compact spare tyre.
- Avoid driving over obstacles. The compact spare tyre diameter is smaller than the diameter of a conventional tyre and reduces the ground clearance approximately 2.5 cm (1 inch), which could result in damage to the vehicle.
- Do not take the vehicle through an automatic car wash whilst the compact spare tyre is installed.
- Do not use tyre chains on the temporary compact tyre. Because of the smaller size, a tyre chain will not fit properly. This could damage the vehicle and result in loss of the chain.
- Temporary compact tyre should not be installed on the front axle if the vehicle must be driven in snow or on ice.

- Do not use the temporary compact tyre on any other vehicle because this tyre has been designed especially for your vehicle.
- The temporary compact tyre tread life is shorter than a regular tyre. Inspect your temporary compact tyre regularly and replace worn compact spare tyres with the same size and design, mounted on the same wheel.
- The temporary compact tyre should not be used on any other wheels, nor should standard tyres, snow tyres, wheel covers or trim rings be used with the temporary compact spare wheel. If such use is attempted, damage to these items or other car components may occur.
- Do not use more than one temporary compact tyre at a time.
- Do not tow a trailer whilst the temporary compact tyre is installed.

Jack label

■ Example

• Type A

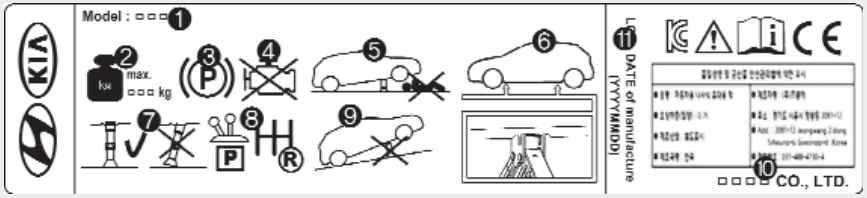

OHYK064001

• Type B

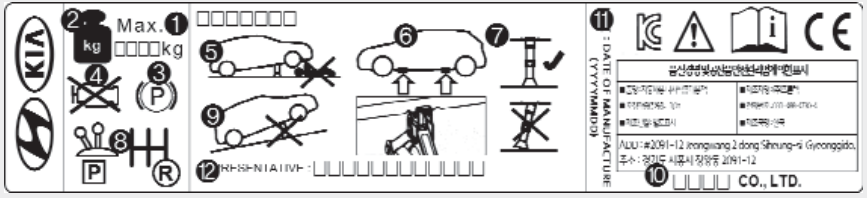

OHYK064005

• Type C (for Australia)

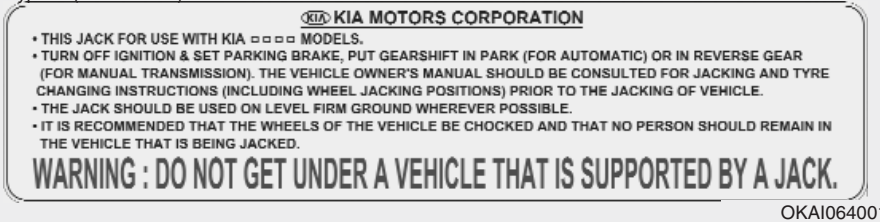

OKAI064001

❊ The actual Jack label in the vehicle may differ from the illustration.
For more detailed specifications, refer to the label attached to the jack.

1. Model Name
2. Maximum allowable load
3. When using the jack, set your parking brake.
4. When using the jack, stop the engine.
5. Do not get under a vehicle that is supported by a jack.
6. The designated locations under the frame
7. When supporting the vehicle, the base plate of jack must be vertical under the lifting point.
8. Shift into Reverse gear on vehicles with manual transmission or move the shift lever to the P position on vehicles with automatic transaxle
9. The jack should be used on firm level ground.
10. Jack manufacturer
11. Production date
12. Representative company and address

EC Declaration of Conformity for Jack

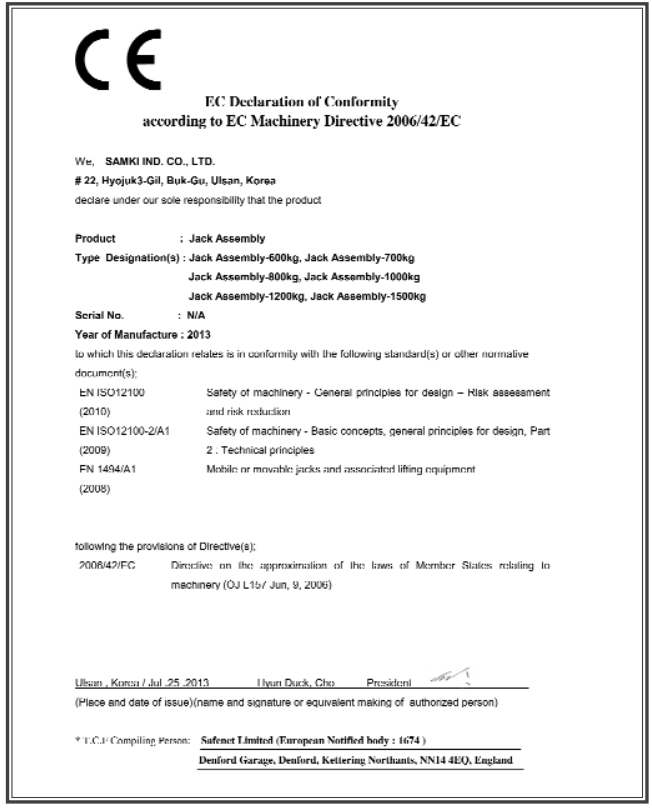

CE

EC Declaration of Conformity
according to EC Machinery Directive 2006/42/EC

We, **SAMKI IND. CO., LTD.**
 # 22, Hyojuk3-Gil, Buk-Gu, Ulsan, Korea
declare under our sole responsibility that the product

Product : Jack Assembly
Type Designation(s) : Jack Assembly-600kg, Jack Assembly-700kg
Jack Assembly-800kg, Jack Assembly-1000kg
Jack Assembly-1200kg, Jack Assembly-1500kg
Serial No. : N/A
Year of Manufacture : 2013
to which this declaration relates is in conformity with the following standard(s) or other normative document(s);

EN ISO12100 (2010)	Safety of machinery - General principles for design – Risk assessment and risk reduction
EN ISO12100-2/A1 (2009)	Safety of machinery - Basic concepts, general principles for design, Part 2 : Technical principles
EN 1494/A1 (2008)	Mobile or movable jacks and associated lifting equipment

following the provisions of Directive(s);

2006/42/EC Directive on the approximation of the laws of Member States relating to machinery (OJ L157 Jun, 9, 2006)

Ulsan , Korea / Jul .25 .2013 Hyun Duck, Cho President

(Place and date of issue)(name and signature or equivalent making of authorized person)

* E.C.-Compiling Person: **Safenet Limited (European Notified body : 1674)**
Denford Garage, Denford, Kettering Northants, NN14 4EQ, England

JACKDOC14S

IF YOU HAVE A FLAT TYRE (WITH TYRE MOBILITY KIT, IF EQUIPPED) (TYPE A)



Please read the instructions before using the Tyre Mobility Kit.

(1) Compressor

(2) Sealant bottle

The Tyre Mobility Kit is a temporary fix to the tyre and have the tyre inspected by a professional workshop as soon as possible. Kia recommends to visit an authorised Kia dealer/service partner.

⚠ CAUTION - One sealant for one tyre

When two or more tyres are flat, do not use the Tyre Mobility Kit because the one supplied canister of sealant in the Tyre Mobility Kit is to only enough sealant for one flat tyre.

⚠ WARNING - Tyre wall

Do not use the Tyre Mobility Kit to repair punctures in the tyre walls. This can result in an accident due to tyre failure.

⚠ WARNING - Temporary fix

Have your tyre repaired as soon as possible. The tyre may lose air pressure at any time after inflating with the Tyre Mobility Kit.

⚠ CAUTION

- ***When replacing or repairing the tyre after using tyre sealant, make certain to remove the sealant attached to the inner part of the tyre and wheel. If the sealant is not removed, noise and vibration may occur.***
- ***We recommend use original Kia manufactured sealant.***
- ***If the TPMS warning light illuminates after using the TMK, have your vehicle inspected by a professional workshop. Kia recommends to contact an authorised Kia dealer/service partner.***

Introduction


OJA066012

With the Tyre Mobility Kit (TMK) you stay mobile even after experiencing a tyre puncture.

The system of compressor and sealing compound effectively and comfortably seals most punctures in a passenger car tyre caused by nails or similar objects and reinflates the tyre.

After you ensured that the tyre is properly sealed you can drive cautiously on the tyre (up to 200 km (120 miles)) at a max. speed of 80 km/h (50 mph) in order to reach a vehicle or tyre dealer to have the tyre replaced.

It is possible that some tyres, especially with larger punctures or damage to the sidewall, cannot be sealed completely.

Air pressure loss in the tyre may adversely affect tyre performance.

For this reason, you should avoid abrupt steering or other driving manoeuvres, especially if the vehicle is heavily loaded or if a trailer is in use.

The TMK is not designed or intended as a permanent tyre repair method and is to be used for one tyre only.

This instruction shows you step by step how to temporarily seal the puncture simply and reliably.

Read the section "Notes on the safe use of the TMK".

⚠ WARNING

Do not use the TMK if a tyre is severely damaged by driving run flat or with insufficient air pressure.

Only punctured areas located within the tread region of the tyre can be sealed using the TMK.

Components of the Tyre Mobility Kit (TMK)

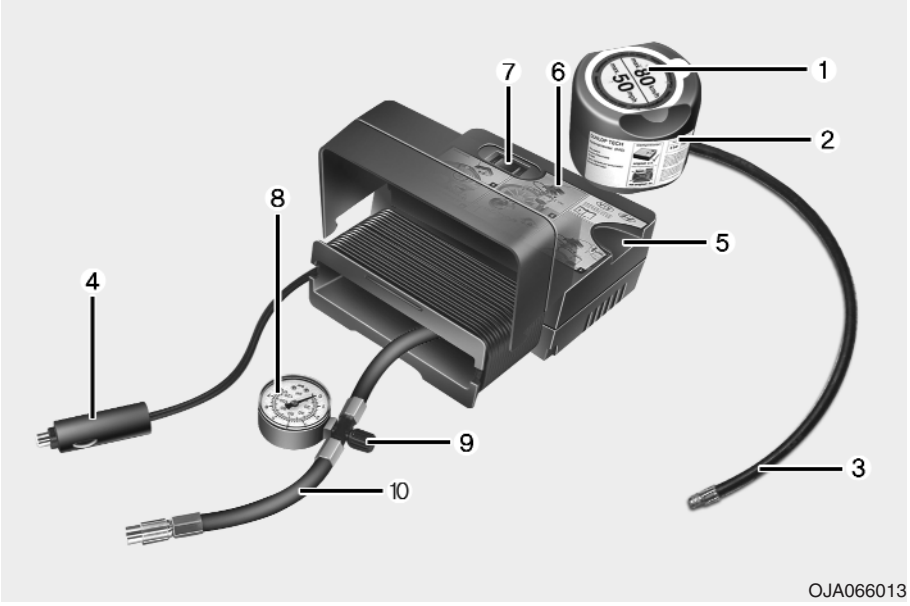

1. Speed restriction label
2. Sealant bottle and label with speed restriction
3. Filling hose from sealant bottle to wheel
4. Connectors and cable for the power outlet direct connection
5. Holder for the sealant bottle
6. Compressor
7. On/off switch
8. Pressure gauge for displaying the tyre inflation pressure
9. Screw cap for reducing tyre inflation pressure
10. Hose to connect compressor and sealant bottle or compressor and wheel

Connectors, cable and connection hose are stored in the compressor housing.

⚠ WARNING

Before using the Tyre Mobility Kit, follow the instructions on the sealant bottle.

Remove the label with the speed restriction from the sealant bottle and apply it to the steering wheel.

Please note the expiry date on the sealant bottle.

Using the Tyre Mobility Kit

1. Detach the speed restriction label (1) from the sealant bottle (2), and place it in a highly visible place inside the vehicle such as on the steering wheel to remind the driver not to drive too fast.
2. Filling the sealant Strictly follow the specified sequence, otherwise the sealant may escape under high pressure.


OTAM061022

3. Shake the sealant bottle.
4. Screw connection hose (10) onto the connector of the sealant bottle.
5. Ensure that screw cap (9) is closed.
6. Unscrew the valve cap from the valve of the flat tyre and screw filling hose (3) of the sealant bottle onto the valve.
7. Insert the sealant bottle into the housing (5) of the compressor so that the bottle is upright.


OJA066012

8. Ensure that the compressor is switched off, position 0.

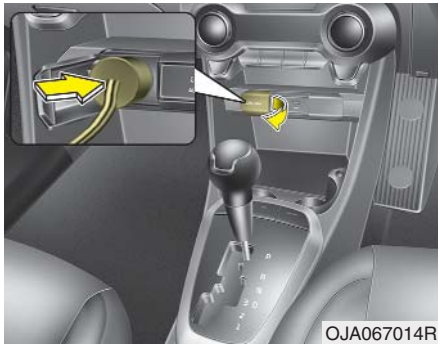

9. Connect between compressor and the vehicle power outlet using the cable and connectors.

✻ NOTICE

Only use the front passenger side power outlet.

10. With the ignition switched on or engine start/stop button position on: Switch on the compressor and let it run for approximately 3 minutes to fill the sealant. The inflation pressure of the tyre after filling is unimportant and will be checked/corrected later.
11. Switch off the compressor.
12. Detach the hose from the sealant bottle connector and from the tyre valve.

Return the Tyre Mobility Kit to its storage location in the vehicle.

⚠ WARNING

Carbon monoxide poisoning and suffocation is possible if the engine is left running in a poorly ventilated or unventilated location (such as inside a building).

Distributing the sealant

13. Immediately drive approximately 7~10km (4~6miles or, about 10min) to evenly distribute the sealant in the tyre.

⚠ CAUTION

Do not exceed a speed of 60 km/h (35 mph). If possible, do not fall below a speed of 20 km/h (12 mph).

Whilst driving, if you experience any unusual vibration, ride disturbance or noise, reduce your speed and drive with caution until you can safely pull off of the side of the road. Call for road side service or towing.

When you use the Tyre Mobility Kit, the wheel may be stained by sealant. Therefore, remove the wheel stained by sealant and have the vehicle inspected at a professional workshop. Kia recommends to visit an authorised Kia dealer/service partner.

Checking the tyre inflation pressure

1. After driving approximately 7~10 km (4~6 miles or about 10 minutes), stop at a suitable location.
2. Connect connection hose (10) of the compressor directly to the tyre valve.
3. Connect between compressor and the vehicle battery using the cable and connectors.
4. Adjust the tyre inflation pressure to the recommended tyre pressure. With the ignition switched on, proceed as follows.
   - **To increase the inflation pressure:** Switch on the compressor, position I. To check the current inflation pressure setting, briefly switch off the compressor.

⚠ WARNING

Do not let the compressor run for more than 10 minutes, otherwise the device will overheat and may be damaged.

⚠ CAUTION

If the inflation pressure is not maintained, drive the vehicle a second time, refer to Distributing the sealant. Then repeat steps 1 to 4.

Use of the TMK may be ineffectual for tyre damage larger than approximately 4 mm (0.16 in).

Contact a professional workshop if the tyre cannot be made roadworthy with the Tyre Mobility Kit. Kia recommends to visit an authorised Kia dealer/service partner.

⚠ WARNING

The tyre inflation pressure must be at least 230 kPa (33 psi). If it is not, do not continue driving.

Call for road side service or towing.

Notes on the safe use of the Tyre Mobility Kit

- Park your car at the side of the road so that you can work with the TMK away from moving traffic. Place your warning triangle in a prominent place to make passing vehicles aware of your location.
- To be sure your vehicle will not move, even when you're on fairly level ground, always set your parking brake.
- Only use the TMK for sealing/inflation passenger car tyres. Do not use on motorcycles, bicycles or any other type of tyres.
- Do not remove any foreign objects-such as nails or screws -that have penetrated the tyre.
- Before using the TMK, read the precautionary advice printed on the sealant bottle!
- Provided the car is outdoors, leave the engine running. Otherwise operating the compressor may eventually drain the car battery.
- Never leave the TMK unattended whilst it is being used.
- Do not leave the compressor running for more than 10 min. at a time or it may overheat.
- Do not use the TMK if the ambient temperature is below -30°C (-22°F).
- When the tyre and wheel are damaged, do not use Tyre Mobility Kit for your safety.

Technical Data

Technical Data		
System Voltage		DC 12 V
Operating Voltage		DC 10 – 15 V
Operating Current		MAX. 15A
Suitable for use at temperatures		- 30 ~ + 70 °C (- 22 ~ + 158 °F)
Max. working pressure		6 bar (87 psi)
Size	Compressor	170 x 150 x 60 mm (6.7 x 5.9 x 2.4 in.)
	Sealant bottle	85 x 70 ø mm (3.3 x 2.8 ø in.)
	Compressor weight	0.8 kg (1.8 lbs)
	Sealant volume	200 ml (12.2 cu. in.)

❈ Sealant and spare parts can be obtained and replaced at an authorised vehicle or tyre dealer. Empty sealant bottles may be disposed of at home. Liquid residue from the sealant should be disposed of by your vehicle or tyre dealer or in accordance with local waste disposal regulations.

IF YOU HAVE A FLAT TYRE (WITH TYRE MOBILITY KIT, IF EQUIPPED) (TYPE B)



Please read the instructions before using the Tyre Mobility Kit.

(1) Compressor

(2) Sealant bottle

The Tyre Mobility Kit is a temporary fix to the tyre and have the tyre inspected by a professional workshop as soon as possible. Kia recommends to visit an authorised Kia dealer/service partner.

⚠ CAUTION - One sealant for one tyre

When two or more tyres are flat, do not use the Tyre Mobility Kit because the one supplied canister of sealant in the Tyre Mobility Kit is to only enough sealant for one flat tyre.

⚠ WARNING - Tyre wall

Do not use the Tyre Mobility Kit to repair punctures in the tyre walls. This can result in an accident due to tyre failure.

⚠ WARNING - Temporary fix

Have your tyre repaired as soon as possible. The tyre may lose air pressure at any time after inflating with the Tyre Mobility Kit.

⚠ CAUTION

- ***When replacing or repairing the tyre after using tyre sealant, make certain to remove the sealant attached to the inner part of the tyre, including the tyre air pressure detection sensor and wheel. If the sealant is not removed, noise and vibration may occur, and the tyre air pressure detection sensor may be damaged.***
- ***We recommend use original Kia manufactured sealant. Using aftermarket sealant may damage the tyre air pressure detection sensor.***
- ***If the TPMS warning light illuminates after using the TMK, have your vehicle inspected by a professional workshop. Kia recommends to contact an authorised Kia dealer/service partner.***

Introduction


OJA068012

With the Tyre Mobility Kit (TMK) you stay mobile even after experiencing a tyre puncture.

The system of compressor and sealing compound effectively and comfortably seals most punctures in a passenger car tyre caused by nails or similar objects and reinflates the tyre.

After you ensured that the tyre is properly sealed you can drive cautiously on the tyre (up to 200 km (120 miles)) at a max. speed of 80 km/h (50 mph) in order to reach a vehicle or tyre dealer to have the tyre replaced.

It is possible that some tyres, especially with larger punctures or damage to the sidewall, cannot be sealed completely.

Air pressure loss in the tyre may adversely affect tyre performance.

For this reason, you should avoid abrupt steering or other driving manoeuvres, especially if the vehicle is heavily loaded or if a trailer is in use.

The TMK is not designed or intended as a permanent tyre repair method and is to be used for one tyre only.

This instruction shows you step by step how to temporarily seal the puncture simply and reliably.

Read the section "Notes on the safe use of the TMK".

⚠ WARNING

Do not use the TMK if a tyre is severely damaged by driving run flat or with insufficient air pressure.

Only punctured areas located within the tread region of the tyre can be sealed using the TMK.

Components of the Tyre Mobility Kit (TMK)

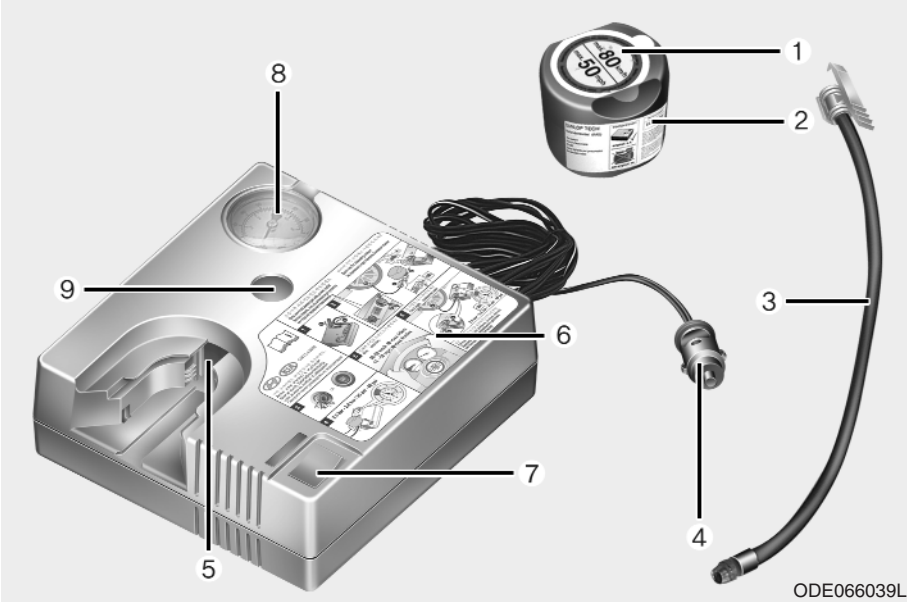

1. Speed restriction label
2. Sealant bottle and label with speed restriction
3. Filling hose from sealant bottle to wheel
4. Connectors and cable for the power outlet direct connection
5. Holder for the sealant bottle
6. Compressor
7. On/off switch
8. Pressure gauge for displaying the tyre inflation pressure
9. Button for reducing tyre inflation pressure

Connectors, cable and connection hose are stored in the compressor housing.

⚠ WARNING

Before using the Tyre Mobility Kit, follow the instructions on the sealant bottle.

Remove the label with the speed restriction from the sealant bottle and apply it to the steering wheel.

Please note the expiry date on the sealant bottle.

Using the Tyre Mobility Kit

1. Detach the speed restriction label (1) from the sealant bottle (2), and place it in a highly visible place inside the vehicle such as on the steering wheel to remind the driver not to drive too fast.


OTAM061022

Carefully follow below steps.

2. Shake the sealant bottle.

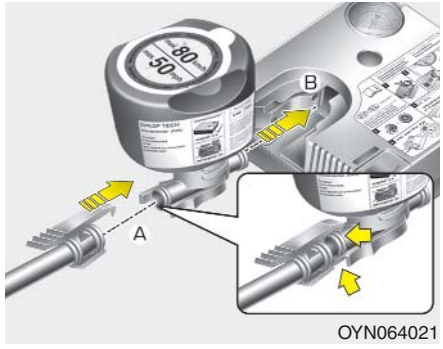

3. Connect the filling hose (3) onto the connector of the sealant bottle (A).
4. Ensure that button (9) on the compressor is not pressed.



5. Unscrew the valve cap from the valve of the flat tyre and screw filling hose (3) of the sealant bottle onto the valve.
6. Insert the sealant bottle into the housing (5) of the compressor so that the bottle is upright.
7. Ensure that the compressor is switched off, position 0.

⚠ CAUTION

Securely install the sealant filling hose to the valve. If not, sealant may flow backward, possibly clogging the filling hose.

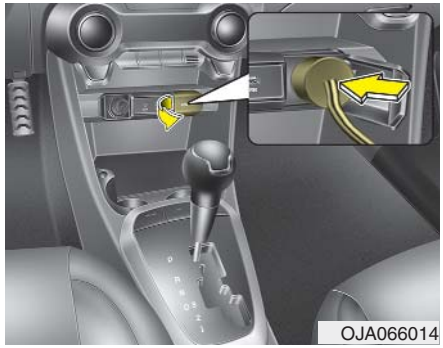

8. Connect between compressor and the vehicle power outlet using the cable and connectors.
9. With the engine start/stop button position on or ignition switch position on, switch on the compressor and let it run for approximately 5~7 minutes to fill the sealant up to proper pressure. The inflation pressure of the tyre after filling is unimportant and will be checked/corrected later.

   Be careful not to overinflate the tyre and stay away from the tyre when filling it.

When the tyre and wheel are damaged, do not use Tyre Mobility Kit for your safety.

⚠ CAUTION - Tyre pressure

Do not attempt to drive your vehicle if the tyre pressure is below 230 kPa (33 psi). This could result in an accident due to sudden tyre failure.

10. Switch off the compressor.
11. Detach the hoses from the sealant bottle connector and from the tyre valve.

Return the TMK to its storage location in the vehicle.

⚠ WARNING - Carbon monoxide

Carbon monoxide poisoning and suffocation is possible if the engine is left running in a poorly ventilated or unventilated location (such as inside a building).

Distributing the sealant

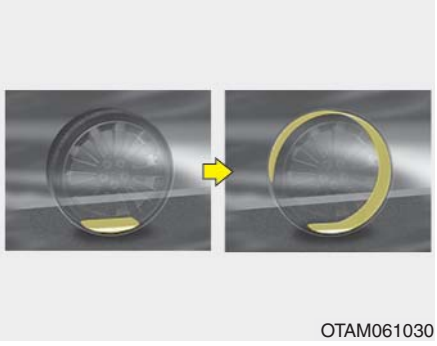

OTAM061030

12. Immediately drive approximately 7~10km (4~6miles or, about 10min) to evenly distribute the sealant in the tyre.

⚠ CAUTION

Do not exceed a speed of 60 km/h (35 mph). If possible, do not fall below a speed of 20 km/h (12 mph).

whilst driving, if you experience any unusual vibration, ride disturbance or noise, reduce your speed and drive with caution until you can safely pull off of the side of the road. Call for road side service or towing.

When you use the Tyre Mobility Kit, the tyre pressure sensors and wheel may be stained by sealant. Therefore, remove the tyre pressure sensors and wheel stained by sealant and have the vehicle inspected at a professional workshop. Kia recommends to visit an authorised Kia dealer/service partner.

Checking the tyre inflation pressure

1. After driving approximately 7~10 km (4~6 miles or about 10 minutes), stop at a suitable location.
2. Connect the filling hose (3) of the compressor (clip mounted side) directly and then connect the filling hose (3) (opposite side) to the tyre valve.
3. Connect between compressor and the vehicle power outlet using the cable and connectors.

4. Adjust the tyre inflation pressure to 230 kPa (33 psi). With the ignition switched on, proceed as follows.
   - **To increase the inflation pressure:** Switch on the compressor, position I. To check the current inflation pressure setting, briefly switch off the compressor.

⚠ WARNING

Do not let the compressor run for more than 10 minutes, otherwise the device will overheat and may be damaged.

   - **To reduce the inflation pressure:** Press the button (9) on the compressor.

⚠ CAUTION

If the inflation pressure is not maintained, drive the vehicle a second time, refer to Distributing the sealant. Then repeat steps 1 to 4.

Use of the TMK may be ineffectual for tyre damage larger than approximately 4 mm (0.16 in).

Contact a professional workshop if the tyre cannot be made roadworthy with the Tyre Mobility Kit. Kia recommends to visit an authorised Kia dealer/service partner.

⚠ WARNING

The tyre inflation pressure must be at least 230 kPa (33 psi). If it is not, do not continue driving. Call for road side service or towing.

Notes on the safe use of the Tyre Mobility Kit

- Park your car at the side of the road so that you can work with the TMK away from moving traffic. Place your warning triangle in a prominent place to make passing vehicles aware of your location.
- To be sure your vehicle will not move, even when you're on fairly level ground, always set your parking brake.
- Only use the TMK for sealing/inflation passenger car tyres. Do not use on motorcycles, bicycles or any other type of tyres.
- Do not remove any foreign objects-such as nails or screws -that have penetrated the tyre.
- Before using the TMK, read the precautionary advice printed on the sealant bottle!
- Provided the car is outdoors, leave the engine running. Otherwise operating the compressor may eventually drain the car battery.
- Never leave the TMK unattended whilst it is being used.
- Do not leave the compressor running for more than 10 min. at a time or it may overheat.
- Do not use the TMK if the ambient temperature is below -30°C (-22°F).
- When the tyre and wheel are damaged, do not use Tyre Mobility Kit for your safety.

Technical Data

Technical Data		
System Voltage		DC 12 V
Operating Voltage		DC 10 – 15 V
Operating Current		MAX. 10 ± 1 A
Suitable for use at temperatures		- 30 ~ + 70 °C (- 22 ~ + 158 °F)
Max. working pressure		6 bar (87 psi)
Size	Compressor	161 X 150 X 55.8 mm (6.3 X 5.9 X 2.2 in.)
	Sealant bottle	ø 85 X 81 mm (ø 3.3 X 3.2 in.)
	Compressor weight	735 ± 25g (1.62 ± 0.06 lbs)
	Sealant volume	200 ml (12.2 cu. in.)

❈ Sealant and spare parts can be obtained and replaced at an authorised vehicle or tyre dealer. Empty sealant bottles may be disposed of at home. Liquid residue from the sealant should be disposed of by your vehicle or tyre dealer or in accordance with local waste disposal regulations.

TOWING

Towing service

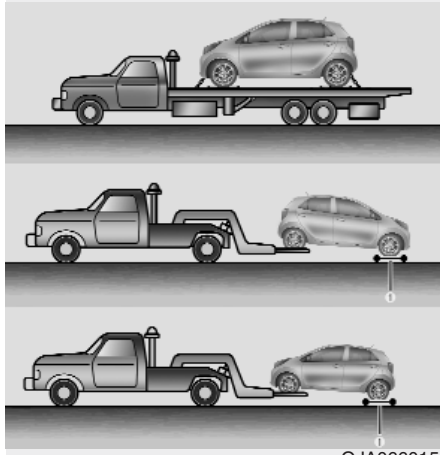
OJA066015

If emergency towing is necessary, we recommend having it done by an authorised Kia dealer or a commercial tow-truck service. Proper lifting and towing procedures are necessary to prevent damage to the vehicle. The use of wheel dollies (1) or flatbed is recommended.

It is acceptable to tow the vehicle with the rear wheels on the ground (without dollies) and the front wheels off the ground.

If any of the loaded wheels or suspension components are damaged or the vehicle is being towed with the front wheels on the ground, use a towing dolly under the front wheels.

When being towed by a commercial tow truck and wheel dollies are not used, the front of the vehicle should always be lifted, not the rear.

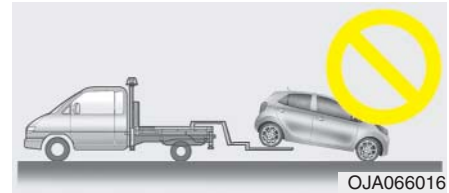
OJA066016


OJA066017

⚠ CAUTION

- ***Do not tow the vehicle backwards with the front wheels on the ground as this may cause damage to the vehicle.***
- ***Do not tow with sling-type equipment. Use wheel lift or flatbed equipment.***

When towing your vehicle in an emergency without wheel dollies :

1. Set the ignition switch in the ACC position.
2. Place the transaxle shift lever in N (Neutral).
3. Release the parking brake.

⚠ CAUTION

Failure to place the transaxle shift lever in N (Neutral) may cause internal damage to the transaxle.

Removable towing hook (if equipped)

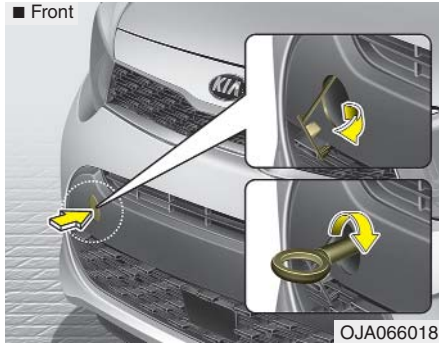

1. Open the tailgate, and remove the towing hook from the tool case.
2. Remove the hole cover pressing the upper (front) part of the cover on the bumper.
3. Install the towing hook by turning it clockwise into the hole until it is fully secured.
4. Remove the towing hook and install the cover after use.

Emergency towing

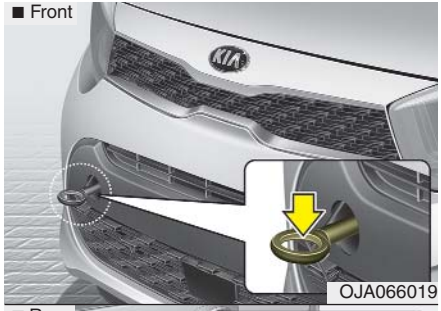

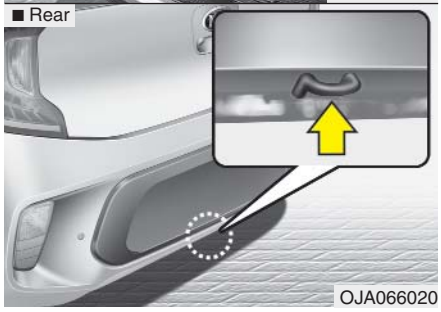

If towing is necessary, we recommend you to have it done by an authorised Kia dealer or a commercial tow truck service.

If towing service is not available in an emergency, your vehicle may be temporarily towed using a cable or chain secured to the emergency towing hook under the front (or rear) of the vehicle. Use extreme caution when towing the vehicle. A driver must be in the vehicle to steer it and operate the brakes.

Towing in this manner may be done only on hard-surfaced roads for a short distance and at low speed. Also, the wheels, axles, power train, steering and brakes must all be in good condition.

- Do not use the tow hooks to pull a vehicle out of mud, sand or other conditions from which the vehicle cannot be driven out under its own power.
- Avoid towing a vehicle heavier than the vehicle doing the towing.
- The drivers of both vehicles should communicate with each other frequently.

⚠ CAUTION

- ***Attach a towing strap to the tow hook.***
- ***Using a portion of the vehicle other than the tow hooks for towing may damage the body of your vehicle.***
- ***Use only a cable or chain specifically intended for use in towing vehicles. Securely fasten the cable or chain to the towing hook provided.***

- Before emergency towing, check if the hook is not broken or damaged.
- Fasten the towing cable or chain securely to the hook.
- Do not jerk the hook. Apply it steadily and with even force.
- To avoid damaging the hook, do not pull from the side or at a vertical angle. Always pull straight ahead.

⚠ WARNING

Use extreme caution when towing the vehicle.

- **Avoid sudden starts or erratic driving manoeuvres which would place excessive stress on the emergency towing hook and towing cable or chain. The hook and towing cable or chain may break and cause serious injury or damage.**
- **If the disabled vehicle is unable to be moved, do not forcibly continue the towing. We recommend that you contact an authorised Kia dealer or a commercial tow truck service for assistance.**
- **Tow the vehicle as straight ahead as possible.**
- **Keep away from the vehicle during towing.**

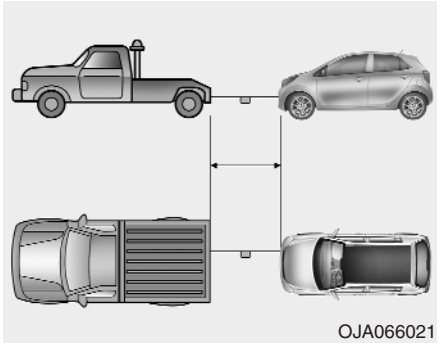

OJA066021

- Use a towing strap less than 5 m (16 feet) long. Attach a white or red cloth (about 30 cm (12 inches) wide) in the middle of the strap for easy visibility.
- Drive carefully so that the towing strap is not loosened during towing.

Emergency towing precautions

- Turn the ignition switch to ACC so the steering wheel isn't locked.
- Place the transaxle shift lever in N (Neutral).
- Release the parking bake.
- Press the brake pedal with more force than normal since you will have reduced brake performance.
- More steering effort will be required because the power steering system will be disabled.
- If you are driving down a long hill, the brakes may overheat and brake performance will be reduced. Stop often and let the brakes cool off.

⚠ **CAUTION - Automatic transaxle**

- ***If the car is being towed with all four wheels on the ground, it can be towed only from the front. Be sure that the transaxle is in neutral. Be sure the steering is unlocked by placing the ignition switch in the ACC position. A driver must be in the towed vehicle to operate the steering and brakes.***
- ***To avoid serious damage to the automatic transaxle, limit the vehicle speed to 15 km/h (10 mph) and drive less than 1.5 km (1 mile) when towing.***
- ***Before towing, check the automatic transaxle for fluid leaks under your vehicle. If the automatic transaxle fluid is leaking, flatbed equipment or a towing dolly must be used.***

EMERGENCY COMMODITY (IF EQUIPPED)

There are some emergency commodities in the vehicle to help you respond to the emergency situation.

Fire extinguisher

If there is small fire and you know how to use the fire extinguisher, take the following steps carefully.

1. Pull the pin at the top of the extinguisher that keeps the handle from being accidentally pressed.
2. Aim the nozzle toward the base of the fire.
3. Stand approximately 2.5 m (8 ft) away from the fire and squeeze the handle to discharge the extinguisher. If you release the handle, the discharge will stop.
4. Sweep the nozzle back and forth at the base of the fire. After the fire appears to be out, watch it carefully since it may re-ignite.

First aid kit

There are some items such as scissors, bandage and adhesive tape and etc. in the kit to give first aid to an injured person.

Triangle reflector

Place the triangle reflector on the road to warn oncoming vehicles during emergencies, such as when the vehicle is parked by the roadside due to any problems.

Tyre pressure gauge (If equipped)

Tyres normally lose some air in day-to-day use, and you may have to add a few pounds of air periodically and it is not usually a sign of a leaking tyre, but of normal wear. Always check tyre pressure when the tyres are cold because tyre pressure increases with temperature.

To check the tyre pressure, take the following steps;

1. Unscrew the inflation valve cap that is located on the rim of the tyre.
2. Press and hold the gauge against the tyre valve. Some air will escape as you begin and more will escape if you don't press the gauge in firmly.
3. A firm non-leaking push will activate the gauge.
4. Read the tyre pressure on the gauge to know whether the tyre pressure is low or high.
5. Adjust the tyre pressures to the specified pressure. Refer to “Tyres and wheels” in section 9.
6. Reinstall the inflation valve cap.

Maintenance

Engine compartment 8-4
Maintenance services 8-7
• Owner's responsibility 8-7
• Owner maintenance precautions 8-7
Owner maintenance 8-9
• Owner maintenance schedule 8-9
Scheduled maintenance service 8-11
• Scheduled maintenance service precaution 8-11
Explanation of scheduled maintenance items . . . 8-38
Engine oil. 8-42
• Checking the engine oil level 8-42
• Changing the engine oil and filter 8-43
Engine coolant (Kappa 1.0L MPI (Petrol, FFV), Kappa 1.2L MPI) 8-44
• Checking the coolant level 8-44
• Changing the coolant 8-47
Engine coolant (Kappa 1.0L T-GDI) 8-48
• Checking the coolant level 8-48
• Changing the coolant 8-51
Brake/clutch fluid. 8-52
• Checking the brake/clutch fluid level 8-52
Automatic transaxle fluid 8-54
• Checking the automatic transaxle fluid level 8-54
• Changing the automatic transaxle fluid 8-56
Washer fluid 8-57
• Checking the washer fluid level 8-57
Parking brake 8-58
• Checking the parking brake. 8-58
Air cleaner (Kappa 1.0L MPI (Petrol, FFV), Kappa 1.2L MPI (Petrol)) 8-59
• Filter replacement 8-59
Air cleaner (Kappa 1.0L T-GDI). 8-61
• Filter replacement 8-61
Climate control air filter 8-63
• Filter inspection 8-63
Wiper blades 8-65
• Blade inspection. 8-65
• Blade replacement 8-65
Battery 8-68
• For best battery service 8-68
• Battery capacity label 8-70
• Battery recharging 8-70
• Reset items 8-71
Tyres and wheels 8-72
• Tyre care 8-72
• Recommended cold tyre inflation pressures. 8-72
• Checking tyre inflation pressure 8-73

• Tyre rotation 8-74
• Wheel alignment and tyre balance 8-75
• Tyre replacement..... 8-76
• Wheel replacement 8-77
• Tyre traction 8-78
• Tyre maintenance 8-78
• Tyre sidewall labeling 8-78
• Low aspect ratio tyre 8-82

Fuses 8-84
• Inner panel fuse replacement..... 8-87
• Engine compartment fuse replacement..... 8-88
• Fuse/relay panel description 8-90

Light bulbs 8-105
• Bulb replacement precaution 8-105
• Light bulb position (Front)..... 8-107
• Light bulb position (Rear) 8-108
• Light bulb position (Side)..... 8-109
• Headlamp (Low/High beam) bulb replacement(Headlamp Type A) 8-109
• Position lamp bulb replacement (Headlamp Type A) 8-110
• Front turn signal lamp bulb replacement (Headlamp Type A) 8-111
• Headlamp (Low/High beam) bulb replacement (Headlamp Type B) 8-112
• Front turn signal lamp bulb (LED type) replacement 8-113
• Front fog lamp bulb replacement 8-113
• Position lamp + DRL (LED type) bulb replacement 8-114
• DRL (Bulb type) bulb replacement 8-114
• Side repeater lamp (LED type) bulb Replacement 8-115
• Side repeater lamp (bulb type) bulb Replacement .. 8-115
• Stop and tail lamp bulb replacement 8-116
• Rear turn signal lamp bulb replacement 8-117
• Stop and tail lamp (LED type) bulb replacement .. 8-119
• Back-up lamp bulb replacement 8-119
• Rear fog lamp bulb replacement 8-120
• High mounted stop lamp bulb replacement 8-120
• License plate lamp bulb replacement 8-121
• Map lamp bulb replacement 8-121
• Vanity mirror lamp bulb replacement 8-122
• Room lamp bulb replacement 8-122
• Glove box lamp bulb replacement 8-123
• Tailgate room lamp bulb replacement 8-124
• Headlamp and front fog lamp aiming (for Europe) .. 8-124

Appearance care..... 8-131
• Exterior care 8-131
• Interior care..... 8-137

Emission control system 8-140
- **Crankcase emission control system 8-140**
- **Evaporative emission control system 8-140**
- **Exhaust emission control system 8-141**

ENGINE COMPARTMENT

■ **Kappa 1.0L MPI Engine (Petrol)**

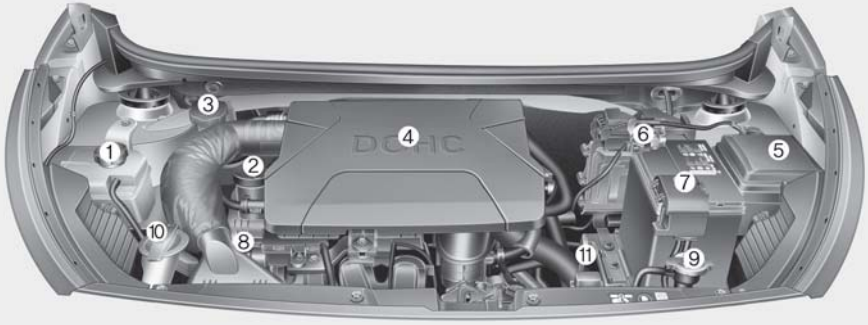

■ **Kappa 1.2L MPI Engine (Petrol)**

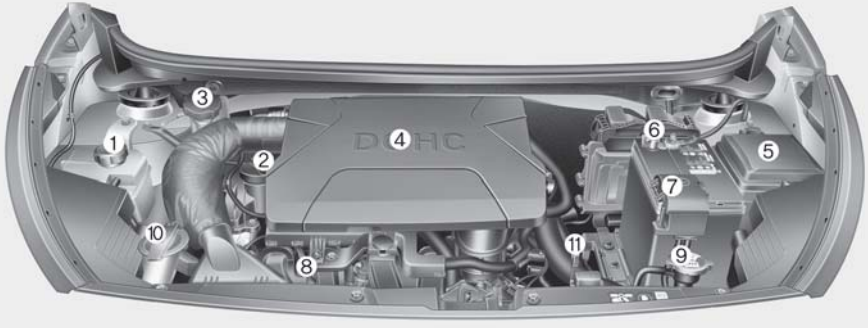

1. Engine coolant reservoir
2. Engine oil filler cap
3. Brake / clutch fluid reservoir
4. Air cleaner
5. Fuse box
6. Negative battery terminal
7. Positive battery terminal
8. Engine oil dipstick
9. Radiator cap
10. Windscreen washer fluid reservoir
11. Automatic transaxle fluid dipstick

❈ The actual engine room in the vehicle may differ from the illustration.

OJA077001R/OJA077003R

■ **Kappa 1.0L T-GDI Engine (Petrol)**



1. Engine coolant reservoir
2. Engine oil filler cap
3. Brake / clutch fluid reservoir
4. Air cleaner
5. Fuse box
6. Negative battery terminal
7. Positive battery terminal
8. Engine oil dipstick
9. Radiator cap
10. Windscreen washer fluid reservoir
11. Automatic transaxle fluid dipstick

❈ The actual engine room in the vehicle may differ from the illustration.

OJA077091R

■ **Kappa 1.0L MPI Engine (FFV)**

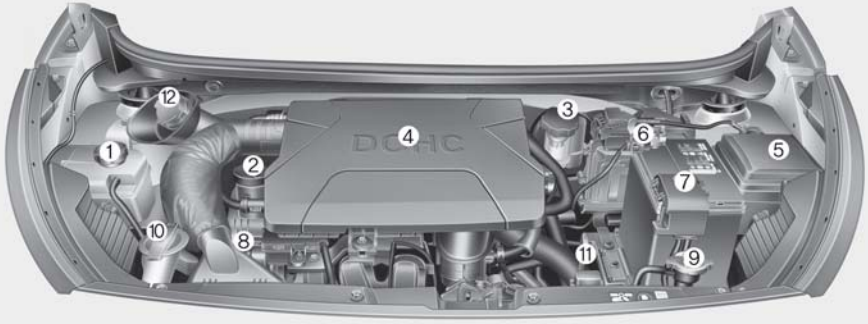

1. Engine coolant reservoir
2. Engine oil filler cap
3. Brake / clutch fluid reservoir
4. Air cleaner
5. Fuse box
6. Negative battery terminal
7. Positive battery terminal
8. Engine oil dipstick
9. Radiator cap
10. Windscreen washer fluid reservoir
11. Automatic transaxle fluid dipstick
12. Petrol reservoir

❈ The actual engine room in the vehicle may differ from the illustration.

OJA077001

MAINTENANCE SERVICES

You should exercise the utmost care to prevent damage to your vehicle and injury to yourself whenever performing any maintenance or inspection procedures.

Inadequate, incomplete or insufficient servicing may result in operational problems with your vehicle that could lead to vehicle damage, an accident, or personal injury.

Owner's responsibility

✻ NOTICE

Maintenance Service and Record Retention are the owner's responsibility.

Have your vehicle serviced by a professional workshop. Kia recommends to visit an authorised Kia dealer/service partner.

You should retain documents that show proper maintenance has been performed on your vehicle in accordance with the scheduled maintenance service charts shown on the following pages.

You need this information to establish your compliance with the servicing and maintenance requirements of your vehicle warranties.

Detailed warranty information is provided in your Warranty & Maintenance book.

Repairs and adjustments required as a result of improper maintenance or a lack of required maintenance are not covered when your vehicle is covered by warranty.

Owner maintenance precautions

Improper or incomplete service may result in problems. This section gives instructions only for the maintenance items that are easy to perform.

✻ NOTICE

Improper owner maintenance during the warranty period may affect warranty coverage. For details, read the separate Warranty & Maintenance book provided with the vehicle. If you're unsure about any servicing or maintenance procedure, have the system serviced by a professional workshop. Kia recommends to visit an authorised Kia dealer/service partner.

⚠ WARNING
- Maintenance work

- **Performing maintenance work on a vehicle can be dangerous. You can be seriously injured whilst performing some maintenance procedures. If you lack sufficient knowledge and experience or the proper tools and equipment to do the work, have the system serviced by a professional workshop. Kia recommends to visit an authorised Kia dealer/service partner.**
- **Working under the bonnet with the engine running is dangerous. It becomes even more dangerous when you wear jewelry or loose clothing. These can become entangled in moving parts and result in injury.**

(Continued)

(Continued)

Therefore, if you must run the engine whilst working under the bonnet, make certain that you remove all jewelry (especially rings, bracelets, watches, and necklaces) and all necktie, scarves, and similar loose clothing before getting near the engine or cooling fans.

⚠ CAUTION

- ***Do not put heavy objects or apply excessive force on top of the engine cover (if equipped) or fuel related parts.***
- ***When you inspect the fuel system (fuel lines and fuel injection devices), contact a professional workshop. Kia recommends to visit an authorised Kia dealer/service partner.***

(Continued)

(Continued)

- ***Do not drive long time with the engine cover (if equipped) removed.***
- ***When checking the engine room, do not go near fire.***

  Fuel, washer fluid, etc. are flammable oils that may cause fire.
- ***Before touching the battery, ignition cables and electrical wiring, you should disconnect the battery "-" terminal. You may get an electric shock from the electric current.***
- ***When you remove the interior trim cover with a flat bed (-) driver, be careful not to damage the cover.***
- ***Be careful when you replace and clean bulbs to avoid burns or electrical shock.***

OWNER MAINTENANCE

The following lists are vehicle checks and inspections that should be performed at the frequencies indicated to help ensure safe, dependable operation of your vehicle.

Any adverse conditions should be brought to the attention of your dealer as soon as possible.

These Owner Maintenance Checks are generally not covered by warranties and you may be charged for labour, parts and lubricants used.

Owner maintenance schedule

When you stop for fuel:

- Check the engine oil level.
- Check the coolant level in the coolant reservoir.
- Check the windscreen washer fluid level.
- Look for low or under-inflated tyres.

⚠ WARNING

Be careful when checking your engine coolant level when the engine is hot. Scalding hot coolant and steam may blow out under pressure. This could cause burns or other serious injury.

Whilst operating your vehicle:

- Note any changes in the sound of the exhaust or any smell of exhaust fumes in the vehicle.
- Check for vibrations in the steering wheel. Notice any increased steering effort or looseness in the steering wheel, or change in its straight-ahead position.
- Notice if your vehicle constantly turns slightly or “pulls” to one side when travelling on smooth, level road.
- When stopping, listen and check for unusual sounds, pulling to one side, increased brake pedal travel or “hard-to-push” brake pedal.
- If any slipping or changes in the operation of your transaxle occurs, check the transaxle fluid level.
- Check manual transaxle operation, including clutch operation.
- Check the automatic transaxle P (Park) function.
- Check the parking brake.
- Check for fluid leaks under your vehicle (water dripping from the air conditioning system during or after use is normal).

At least monthly:

- Check the coolant level in the engine coolant reservoir.
- Check the operation of all exterior lights, including the stoplights, turn signals and hazard warning flashers.
- Check the inflation pressures of all tyres including the spare for tyres that are worn, show uneven wear, or are damaged.
- Check for loose wheel lug nuts.

At least twice a year (i.e., every Spring and Fall):

- Check the radiator, heater and air conditioning hoses for leaks or damage.
- Check the windscreen washer spray and wiper operation. Clean the wiper blades with clean cloth dampened with washer fluid.
- Check the headlight alignment.
- Check the muffler, exhaust pipes, shields and clamps.
- Check the lap/shoulder belts for wear and function.

At least once a year:

- Clean the body and door drain holes.
- Lubricate the door hinges and checks, and bonnet hinges.
- Lubricate the door and bonnet locks and latches.
- Lubricate the door rubber weatherstrips.
- Check the air conditioning system.
- Inspect and lubricate the automatic transaxle linkage and controls.
- Clean the battery and terminals.
- Check the brake/clutch fluid level.

SCHEDULED MAINTENANCE SERVICE

Scheduled maintenance service precaution

Follow the Normal Maintenance Schedule if the vehicle is usually operated where none of the following conditions apply. If any of the following conditions apply, follow the Maintenance Under Severe Usage Conditions.

- Repeated driving short distance of less than 8 km (5 miles) in normal temperature or less than 16 km(10 miles) in freezing temperature
- Extensive engine idling or low speed driving for long distances
- Driving on rough, dusty, muddy, unpaved, graveled or salt-spread roads
- Driving in areas using salt or other corrosive materials or in very cold weather
- Driving in heavy dust condition
- Driving in heavy traffic area
- Driving on uphill, downhill, or mountain road repeatedly
- Towing a trailer or using a camper, or roof rack
- Driving as a patrol car, taxi, other commercial use of vehicle towing
- Driving over 170 km/h (106 mile/h)
- Frequently driving in stop-and-go condition

If your vehicle is operated under the above conditions, you should inspect, replace or refill more frequently than the following Normal Maintenance Schedule. After the periods or distance shown in the chart, continue to follow the prescribed maintenance intervals.

Normal Maintenance Schedule - For Petrol Engine [For Australia and New Zealand]

The following maintenance services must be performed to ensure good emission control and performance. Keep receipts for all vehicle emission services to protect your warranty. Where both mileage and time are shown, the frequency of service is determined by whichever occurs first.

NO.	ITEM	REMARK
*1	Engine oil and engine oil filter	Check the engine oil level and leak every 500 km or before starting a long trip.
*2	Coolant (Engine)	When adding coolant, use only deionized water or soft water for your vehicle and never mix hard water in the coolant filled at the factory. An improper coolant mixture can result in serious malfunction or engine damage.
*3	Drive belts (Engine)	• Adjust alternator, water pump and air conditioner (if equipped) drive belt. Inspect and if necessary repair or replace. • Inspect drive belt tensioner, idler and alternator pulley and if necessary correct or replace.
*4	Valve clearance	Inspect for excessive valve noise and/or engine vibration and adjust if necessary. In this case, have the system checked by a professional workshop. Kia recommends to visit an authorised Kia dealer/service partner.
*5	Spark plug	For your convenience, it can be replaced prior to it's interval when you do maintenance of other items.

NO.	ITEM	REMARK
*6	Manual transaxle fluid	Manual transaxle fluid should be changed anytime it has been submerged in water.
*7	Fuel additives (Petrol)	Kia recommends that you use unleaded petrol which has an octane rating of RON (Research Octane Number) 95 / AKI (Anti Knock Index) 91 or higher (for Europe) or Octane Rating of RON (Research Octane Number) 91 / AKI (Anti-Knock Index) 87 or higher (except Europe). For customers who do not use good quality petrols including fuel additives regularly, and have problems starting or the engine does not run smoothly, one bottle of additives added to the fuel tank at every 15,000 km (for Non Turbo Model) / 10,000 km (for Turbo Model). Additives are available from a professional workshop along with information on how to use them. Kia recommends to visit an authorised Kia dealer/service partner. Do not mix other additives.

Normal Maintenance Schedule - Non Turbo Model [For Australia and New Zealand] (Continue)

MAINTENANCE INTERVALS / INTENANCE ITEM		Number of months or driving distance, whichever comes first							
	Months	12	24	36	48	60	72	84	96
	Km×1,000	15	30	45	60	75	90	105	120
Engine oil and engine oil filter *1	Kappa 1.2L MPI	Replace every 15,000 km or 12 months							
Coolant (Engine) *2		At first, Replace 210,000 km or 120 months after that, Replace every 30,000 km or 24 months							
Drive belts (Engine) *3		-	I	-	I	-	I	-	I
Vacuum hoses and crankcase ventilation hoses		-	I	-	I	-	I	-	I
Spark plugs *5	Kappa 1.2L MPI (Unleaded)	Replace every 150,000 km							
Automatic transaxle fluid		-	-	-	I	-	-	-	I
Manual transaxle fluid *6		-	-	-	I	-	-	-	I
Drive shaft and boots		-	I	-	I	-	I	-	I
Fuel additives (Petrol) *7		Add every 15,000 km or 12 months							
Fuel lines, hoses and connections		-	-	-	I	-	-	-	I
Fuel tank air filter		-	I	-	R	-	I	-	R
Vapour hose and fuel filler cap		-	-	-	I	-	-	-	I
Air cleaner filter		I	I	R	I	I	R	I	I

I : Inspect and if necessary, adjust, correct, clean or replace.
R : Replace or change.

Normal Maintenance Schedule - Non Turbo Model [For Australia and New Zealand]

MAINTENANCE INTERVALS / INTENANCE ITEM	Number of months or driving distance, whichever comes first							
	Months	**12**	**24**	**36**	**48**	**60**	**72**	**84**	**96**
	Km×1,000	**15**	**30**	**45**	**60**	**75**	**90**	**105**	**120**
Exhaust system		I	I	I	I	I	I	I	I
Cooling system		At first, Inspect 60,000 km or 48 months after that, Inspect every 30,000 km or 24 months							
Air conditioner compressor/refrigerant		I	I	I	I	I	I	I	I
Climate control air filter		I	R	I	R	I	R	I	R
Brake discs and pads		I	I	I	I	I	I	I	I
Brake drums and linings		-	I	-	I	-	I	-	I
Brake lines, hoses and connections		I	I	I	I	I	I	I	I
Brake/clutch fluid		I	R	I	R	I	R	I	R
Parking brake		-	I	-	I	-	I	-	I
Steering gear rack, linkage and boots		I	I	I	I	I	I	I	I
Suspension ball joints		I	I	I	I	I	I	I	I
Tyre (pressure & tread wear)		I	I	I	I	I	I	I	I
Battery condition		I	I	I	I	I	I	I	I

I : Inspect and if necessary, adjust, correct, clean or replace.
R : Replace or change.

Maintenance Under Severe Usage Conditions - Non Turbo Model [For Australia and New Zealand]

MAINTENANCE ITEM		MAINTENANCE OPERATION	MAINTENANCE INTERVALS	DRIVING CONDITION
Engine oil and engine oil filter	Kappa 1.2L MPI	R	Every 7,500 km or 6 months	A, B, C, D, E, F, G, H, I, J, K
Spark plugs		R	Replace more frequently depending on the condition	B, H, I, K
Automatic transaxle fluid		R	Every 90,000 km	A, C, D, E, F, G, H, I, J
Manual transaxle fluid		R	Every 120,000 km	C, D, E, F, G, H, I, J
Drive shaft and boots		I	Inspect more frequently depending on the condition	C, D, E, F, G, H, I, J
Air cleaner filter		R	Replace more frequently depending on the condition	C, E
Climate control air filter		R	Replace more frequently depending on the condition	C, E, G
Brake discs and pads, calipers and rotors		I	Inspect more frequently depending on the condition	C, D, E, G, H
Brake drums and linings		I	Inspect more frequently depending on the condition	C, D, E, G, H

MAINTENANCE ITEM	MAINTENANCE OPERATION	MAINTENANCE INTERVALS	DRIVING CONDITION
Parking brake	I	Inspect more frequently depending on the condition	C, D, G, H
Steering gear rack, linkage and boots	I	Inspect more frequently depending on the condition	C, D, E, F, G
Suspension ball joints	I	Inspect more frequently depending on the condition	C, D, E, F, G

Maintenance operation
I : Inspect and if necessary, adjust, correct, clean or replace.
R : Replace or change.

SEVERE DRIVING CONDITIONS

A : Repeatedly driving short distance of less than 8 km in normal temperature or less than 16 km in freezing temperature.
B : Extensive engine idling or low speed driving for long distances.
C : Driving on rough, dusty, muddy, unpaved, graveled or salt-spread roads.
D : Driving in areas using salt or other corrosive materials or in very cold weather
E : Driving in heavy dust condition.
F : Driving in heavy traffic area.
G : Driving on uphill, downhill, or mountain roads repeatedly.
H : Towing a trailer or using a camper on roof rack.
I : Driving for patrol car, taxi, other commercial use of vehicle towing.
J : Driving over 170 km/h.
K : Frequently driving in stop-and-go conditions.

Normal Maintenance Schedule - Turbo Model [For Australia and New Zealand] (Continue)

MAINTENANCE INTERVALS / MAINTENANCE ITEM	Number of months or driving distance, whichever comes first								
	Months	**12**	**24**	**36**	**48**	**60**	**72**	**84**	**96**
	Km×1,000	**10**	**20**	**30**	**40**	**50**	**60**	**70**	**80**
Engine oil and engine oil filter *1	Kappa 1.0L T-GDI	R	R	R	R	R	R	R	R
Coolant (Engine) *2		At first, Replace 210,000 km or 120 months after that, Replace every 30,000 km or 24 months							
Drive belts (Engine) *3		-	I	-	I	-	I	-	I
Valve clearance *4	Kappa 1.0L T-GDI	-	-	-	-	-	I	-	-
Vacuum hoses and crankcase ventilation hoses		-	I	-	I	-	I	-	I
Spark plugs *5	Kappa 1.0L T-GDI	Replace every 70,000 km							
Automatic transaxle fluid		-	-	-	I	-	-	-	I
Manual transaxle fluid *6		-	-	-	I	-	-	-	I
Drive shaft and boots		-	I	-	I	-	I	-	I
Fuel additives (Petrol) *7		Add every 10,000 km or 12 months							
Fuel lines, hoses and connections		-	-	-	I	-	-	-	I
Fuel tank air filter		-	I	-	R	-	I	-	R
Vapour hose and fuel filler cap		-	-	-	I	-	-	-	I

I : Inspect and if necessary, adjust, correct, clean or replace.
R : Replace or change.

Normal Maintenance Schedule - Turbo Model [For Australia and New Zealand]

MAINTENANCE INTERVALS / MAINTENANCE ITEM		Number of months or driving distance, whichever comes first							
	Months	12	24	36	48	60	72	84	96
	Km×1,000	10	20	30	40	50	60	70	80
Air cleaner filter		I	I	R	I	I	R	I	I
Intercooler, in/out hose, air intake hose	Kappa 1.0L T-GDI	I	I	I	I	I	I	I	I
Exhaust system		-	I	-	I	-	I	-	I
Cooling system		-	-	-	I	-	I	-	I
Air conditioner compressor/refrigerant		I	I	I	I	I	I	I	I
Climate control air filter		I	R	I	R	I	R	I	R
Brake discs and pads		-	I	-	I	-	I	-	I
Brake drums and linings		-	I	-	I	-	I	-	I
Brake lines, hoses and connections		-	I	-	I	-	I	-	I
Brake/clutch fluid		I	R	I	R	I	R	I	R
Parking brake		-	I	-	I	-	I	-	I
Steering gear rack, linkage and boots		I	I	I	I	I	I	I	I
Suspension ball joints		I	I	I	I	I	I	I	I
Tyre (pressure & tread wear)		I	I	I	I	I	I	I	I
Battery condition		-	I	-	I	-	I	-	I

I : Inspect and if necessary, adjust, correct, clean or replace.
R : Replace or change.

Maintenance Under Severe Usage Conditions - Turbo Model [For Australia and New Zealand]

MAINTENANCE ITEM		MAINTENANCE OPERATION	MAINTENANCE INTERVALS	DRIVING CONDITION
Engine oil and engine oil filter	Kappa 1.0L T-GDI	R	Every 5,000 km or 6 months	A, B, C, D, E, F, G, H, I, J, K
Spark plugs		R	Replace more frequently depending on the condition	B, H, I, K
Automatic transaxle fluid		R	Every 90,000 km	A, C, D, E, F, G, H, I, J
Manual transaxle fluid		R	Every 120,000 km	C, D, E, F, G, H, I, J
Drive shaft and boots		I	Inspect more frequently depending on the condition	C, D, E, F, G, H, I, J
Air cleaner filter		R	Replace more frequently depending on the condition	C, E
Climate control air filter		R	Replace more frequently depending on the condition	C, E, G
Brake discs and pads, calipers and rotors		I	Inspect more frequently depending on the condition	C, D, E, G, H
Brake drums and linings		I	Inspect more frequently depending on the condition	C, D, E, G, H

MAINTENANCE ITEM	MAINTENANCE OPERATION	MAINTENANCE INTERVALS	DRIVING CONDITION
Parking brake	I	Inspect more frequently depending on the condition	C, D, G, H
Steering gear rack, linkage and boots	I	Inspect more frequently depending on the condition	C, D, E, F, G
Suspension ball joints	I	Inspect more frequently depending on the condition	C, D, E, F, G

Maintenance operation

I : Inspect and if necessary, adjust, correct, clean or replace.

R : Replace.

SEVERE DRIVING CONDITIONS

A : Repeatedly driving short distance of less than 8 km in normal temperature or less than 16 km in freezing temperature.

B : Extensive engine idling or low speed driving for long distances.

C : Driving on rough, dusty, muddy, unpaved, graveled or salt-spread roads.

D : Driving in areas using salt or other corrosive materials or in very cold weather

E : Driving in heavy dust condition.

F : Driving in heavy traffic area.

G : Driving on uphill, downhill, or mountain roads repeatedly.

H : Towing a trailer or using a camper on roof rack.

I : Driving for patrol car, taxi, other commercial use of vehicle towing.

J : Driving over 170 km/h.

K : Frequently driving in stop-and-go conditions.

Normal Maintenance Schedule - For Petrol Engine [For Europe (Except Russia)]

The following maintenance services must be performed to ensure good emission control and performance. Keep receipts for all vehicle emission services to protect your warranty. Where both mileage and time are shown, the frequency of service is determined by whichever occurs first.

NO.	ITEM	REMARK
*1	Engine oil and engine oil filter	Check the engine oil level and leak every 500 km (350 miles) or before starting a long trip.
*2	Coolant (Engine)	When adding coolant, use only deionized water or soft water for your vehicle and never mix hard water in the coolant filled at the factory. An improper coolant mixture can result in serious malfunction or engine damage.
*3	Drive belts (Engine)	• Adjust alternator, water pump and air conditioner (if equipped) drive belt. Inspect and if necessary repair or replace. • Inspect drive belt tensioner, idler and alternator pulley and if necessary correct or replace.
*4	Valve clearance	Inspect for excessive valve noise and/or engine vibration and adjust if necessary. In this case, have the system checked by a professional workshop. Kia recommends to visit an authorised Kia dealer/service partner.
*5	Spark plug	For your convenience, it can be replaced prior to it's interval when you do maintenance of other items.

NO.	ITEM	REMARK
*6	Manual transaxle fluid	Manual transaxle fluid should be changed anytime it has been submerged in water.
*7	Fuel additives (Petrol)	Kia recommends that you use unleaded petrol which has an octane rating of RON (Research Octane Number) 95 / AKI (Anti Knock Index) 91 or higher (for Europe) or Octane Rating of RON (Research Octane Number) 91 / AKI (Anti-Knock Index) 87 or higher (except Europe). For customers who do not use good quality petrols including fuel additives regularly, and have problems starting or the engine does not run smoothly, one bottle of additives added to the fuel tank at every 15,000 km (10,000 miles) (for Europe)/ 10,000 km (6,500 miles) (except Europe, China, Brazil) / 5,000 km (3,000 miles) (for China, Brazil). Additives are available from a professional workshop along with information on how to use them. Kia recommends to visit an authorised Kia dealer/service partner. Do not mix other additives.

MAINTENANCE INTERVALS / MAINTENANCE ITEM		Normal Maintenance Schedule - For Petrol Engine [For Europe (Except Russia)]							
		Number of months or driving distance, whichever comes first							
	Months	12	24	36	48	60	72	84	96
	Miles×1,000	10	20	30	40	50	60	70	80
	Km×1,000	15	30	45	60	75	90	105	120
Engine oil and engine oil filter *1	Kappa 1.0L T-GDI	Replace every 15,000 km (10,000 miles) or 12 months							
	Kappa 1.0L MPI								
	Kappa 1.2L MPI								
Coolant (Engine) *2		At first, Replace 210,000 km (140,000 miles) or 120 months after that, Replace every 30,000 km (20,000 miles) or 24 months							
Drive belts (Engine) *3		At first, Inspect 90,000 km (60,000 miles) or 72 months after that, Inspect every 30,000 km (20,000 miles) or 24 months							
Valve clearance *4	Kappa 1.0L T-GDI, Kappa 1.0L MPI	-	-	-	-	-	I	-	-
Vacuum hoses and crankcase ventilation hoses		-	I	-	I	-	I	-	I
Spark plugs *5	Kappa 1.0L T-GDI	Replace every 75,000 km (50,000 miles)							
	Kappa 1.0L MPI	Replace every 150,000 km (100,000 miles)							
	Kappa 1.2L MPI	Replace every 150,000 km (100,000 miles)							
Automatic transaxle fluid		-	-	-	I	-	-	-	I
Manual transaxle fluid *6		-	-	-	I	-	-	-	I
Drive shaft and boots		-	I	-	I	-	I	-	I

I : Inspect and if necessary, adjust, correct, clean or replace. R : Replace or change.

MAINTENANCE INTERVALS / MAINTENANCE ITEM		Normal Maintenance Schedule - For Petrol Engine [For Europe (Except Russia)]							
		Number of months or driving distance, whichever comes first							
	Months	12	24	36	48	60	72	84	96
	Miles×1,000	10	20	30	40	50	60	70	80
	Km×1,000	15	30	45	60	75	90	105	120
Fuel additives (Petrol) *7		Add every 15,000 km (10,000 miles) or 12 months							
Fuel lines, hoses and connections		-	-	-	I	-	-	-	I
Fuel tank air filter		-	-	-	I	-	-	-	I
Vapour hose and fuel filler cap		-	-	-	I	-	-	-	I
Air cleaner filter		-	I	-	R	-	I	-	R
Intercooler, in/out hose, air intake hose	Kappa 1.0L T-GDI	I	I	I	I	I	I	I	I
Exhaust system		I	I	I	I	I	I	I	I
Cooling system		At first, Inspect 60,000 km (40,000 miles) or 48 months after that, Inspect every 30,000 km (20,000 miles) or 24 months							
Air conditioner compressor/refrigerant		I	I	I	I	I	I	I	I
Climate control air filter		-	R	-	R	-	R	-	R
Brake discs and pads		I	I	I	I	I	I	I	I
Brake drums and linings		-	I	-	I	-	I	-	I
Brake lines, hoses and connections		I	I	I	I	I	I	I	I
Brake/clutch fluid		I	R	I	R	I	R	I	R
Parking brake		-	I	-	I	-	I	-	I

I : Inspect and if necessary, adjust, correct, clean or replace. R : Replace or change.

MAINTENANCE INTERVALS / MAINTENANCE ITEM	Normal Maintenance Schedule - For Petrol Engine [For Europe (Except Russia)]							
	Number of months or driving distance, whichever comes first							
	Months	12	24	36	48	60	72	84	96
	Miles×1,000	10	20	30	40	50	60	70	80
	Km×1,000	15	30	45	60	75	90	105	120
Steering gear rack, linkage and boots		I	I	I	I	I	I	I	I
Suspension ball joints		I	I	I	I	I	I	I	I
Tyre (pressure & tread wear)		I	I	I	I	I	I	I	I
Battery condition		I	I	I	I	I	I	I	I

I : Inspect and if necessary, adjust, correct, clean or replace. R : Replace or change.

Maintenance Under Severe Usage Conditions - For Petrol Engine [For Europe (Except Russia)]

MAINTENANCE ITEM		MAINTENANCE OPERATION	MAINTENANCE INTERVALS	DRIVING CONDITION
Engine oil and engine oil filter	Kappa 1.0L T-GDI	R	Every 7,500 km (5,000 miles) or 6 months	A, B, C, D, E, F, G, H, I, J, K
	Kappa 1.0L MPI			
	Kappa 1.2L MPI			
Spark plugs		R	Replace more frequently depending on the condition	B, H, I, K
Automatic transaxle fluid		R	Every 90,000 km (60,000 miles)	A, C, D, E, F, G, H, I, J
Manual transaxle fluid		R	Every 120,000 km (80,000 miles)	C, D, E, F, G, H, I, J
Drive shaft and boots		I	Inspect more frequently depending on the condition	C, D, E, F, G, H, I, J
Air cleaner filter		R	Replace more frequently depending on the condition	C, E
Climate control air filter		R	Replace more frequently depending on the condition	C, E, G
Brake discs and pads, calipers and rotors		I	Inspect more frequently depending on the condition	C, D, E, G, H
Brake drums and linings		I	Inspect more frequently depending on the condition	C, D, E, G, H

MAINTENANCE ITEM	MAINTENANCE OPERATION	MAINTENANCE INTERVALS	DRIVING CONDITION
Parking brake	I	Inspect more frequently depending on the condition	C, D, G, H
Steering gear rack, linkage and boots	I	Inspect more frequently depending on the condition	C, D, E, F, G
Suspension ball joints	I	Inspect more frequently depending on the condition	C, D, E, F, G

Maintenance operation
I : Inspect and if necessary, adjust, correct, clean or replace. R : Replace or change.

SEVERE DRIVING CONDITIONS

A : Repeatedly driving short distance of less than 8 km (5miles) in normal temperature or less than 16 km (10 miles) in freezing temperature.
B : Extensive engine idling or low speed driving for long distances.
C : Driving on rough, dusty, muddy, unpaved, graveled or salt-spread roads.
D : Driving in areas using salt or other corrosive materials or in very cold weather
E : Driving in heavy dust condition.
F : Driving in heavy traffic area.
G : Driving on uphill, downhill, or mountain roads repeatedly.
H : Towing a trailer or using a camper on roof rack.
I : Driving for patrol car, taxi, other commercial use of vehicle towing.
J : Driving over 170 km/h (106 mile/h).
K : Frequently driving in stop-and-go conditions.

Normal Maintenance Schedule - For Petrol Engine [Except Europe (Including Russia)]

The following maintenance services must be performed to ensure good emission control and performance. Keep receipts for all vehicle emission services to protect your warranty. Where both mileage and time are shown, the frequency of service is determined by whichever occurs first.

NO.	ITEM	REMARK
*1	Engine oil and engine oil filter	Check the engine oil level and leak every 500 km (350 miles) or before starting a long trip.
*2	Coolant (Engine)	When adding coolant, use only deionized water or soft water for your vehicle and never mix hard water in the coolant filled at the factory. An improper coolant mixture can result in serious malfunction or engine damage.
*3	Drive belts (Engine)	• Adjust alternator, water pump and air conditioner (if equipped) drive belt. Inspect and if necessary repair or replace. • Inspect drive belt tensioner, idler and alternator pulley and if necessary correct or replace.
*4	Valve clearance	Inspect for excessive valve noise and/or engine vibration and adjust if necessary. In this case, have the system checked by a professional workshop. Kia recommends to visit an authorised Kia dealer/service partner.
*5	Spark plug	For your convenience, it can be replaced prior to it's interval when you do maintenance of other items.

NO.	ITEM	REMARK
*6	Manual transaxle fluid	Manual transaxle fluid should be changed anytime it has been submerged in water.
*7	Fuel additives (Petrol)	Kia recommends that you use unleaded petrol which has an octane rating of RON (Research Octane Number) 95 / AKI (Anti Knock Index) 91 or higher (for Europe) or Octane Rating of RON (Research Octane Number) 91 / AKI (Anti-Knock Index) 87 or higher (except Europe). For customers who do not use good quality gasolines including fuel additives regularly, and have problems starting or the engine does not run smoothly, one bottle of additives added to the fuel tank at every 15,000 km (10,000 miles) (for Europe)/ 10,000 km (6,500 miles) (except Europe, China, Brazil) / 5,000 km (3,000 miles) (for China, Brazil). Additives are available from a professional workshop along with information on how to use them. Kia recommends to visit an authorised Kia dealer/service partner. Do not mix other additives.
*8	External fuel filter	Maintenance interval is depending on fuel quality. If you have the problem such as fuel flow restriction, loss of power, hard starting or noise of fuel parts, have the fuel filter or fuel pump checked and replaced immediately by a professional workshop. Kia recommends to visit an authorised Kia dealer/service partner.

MAINTENANCE INTERVALS / MAINTENANCE ITEM		Normal Maintenance Schedule - For Petrol Engine [Except Europe (Including Russia)]							
		Number of months or driving distance, whichever comes first							
	Months	12	24	36	48	60	72	84	96
	Miles×1,000	10	20	30	40	50	60	70	80
	Km×1,000	15	30	45	60	75	90	105	120
Engine oil and engine oil filter *1	Kappa 1.0L T-GDI	Except Middle East, Central & South America, India, Libia, Iran, Algeria, Sudan, Morocco, Tunisia, Egypt, China : Replace every 10,000 km (6,500 miles) or 12 months For Middle East, Central & South America, India, Libia, Iran, Algeria, Sudan, Morocco, Tunisia, Egypt : Replace every 10,000 km (6,500 miles) or 12 months For China : Replace every 5,000 km (3,000 miles) or 6 months							
	Kappa 1.0L MPI	Except Middle East, Central & South America, India, Libia, Iran, Algeria, Sudan, Morocco, Tunisia, Egypt, China : Replace every 15,000 km(10,000 miles) or 12 months For Middle East, Central & South America, India, Libia, Iran, Algeria, Sudan, Morocco, Tunisia, Egypt : Replace every 10,000 km (6,500 miles) or 12 months For China : Replace every 5,000 km (3,000 miles) or 6 months							
	Kappa 1.0L FFV								
	Kappa 1.2L MPI								
Coolant (Engine) *2		At first, Replace 210,000 km (140,000 miles) or 120 months after that, Replace every 30,000 km (20,000 miles) or 24 months							
Drive belts (Engine) *3		-	I	-	I	-	I	-	I
Valve clearance *4	Kappa 1.0L T-GDI, Kappa 1.0L MPI, Kappa 1.0L FFV	-	-	-	-	-	I	-	-

I : Inspect and if necessary, adjust, correct, clean or replace. R : Replace or change.

MAINTENANCE INTERVALS / MAINTENANCE ITEM		Normal Maintenance Schedule - For Petrol Engine [Except Europe (Including Russia)]							
		Number of months or driving distance, whichever comes first							
	Months	12	24	36	48	60	72	84	96
	Miles×1,000	10	20	30	40	50	60	70	80
	Km×1,000	15	30	45	60	75	90	105	120
Vacuum hoses and crankcase ventilation hoses		-	I	-	I	-	I	-	I
Spark plugs *5	Kappa 1.0L T-GDI (Unleaded)	Replace every 75,000 km (50,000 miles)							
	Kappa 1.0L MPI (Unleaded)	Replace every 150,000 km (100,000 miles)							
	Kappa 1.2L MPI (Unleaded)	Replace every 150,000 km (100,000 miles)							
	Kappa 1.0L MPI (FFV)	Replace every 150,000 km (100,000 miles)							
	Kappa 1.0L MPI (Leaded)	Replace every 30,000 km (20,000 miles)							
	Kappa 1.2L MPI (Leaded)	Replace every 30,000 km (20,000 miles)							
Automatic transaxle fluid		-	-	-	I	-	-	-	I
Manual transaxle fluid *6		-	-	-	I	-	-	-	I
Drive shaft and boots		-	I	-	I	-	I	-	I

I : Inspect and if necessary, adjust, correct, clean or replace. R : Replace or change.

MAINTENANCE INTERVALS / MAINTENANCE ITEM		Normal Maintenance Schedule - For Petrol Engine [Except Europe (Including Russia)]							
		Number of months or driving distance, whichever comes first							
	Months	12	24	36	48	60	72	84	96
	Miles×1,000	10	20	30	40	50	60	70	80
	Km×1,000	15	30	45	60	75	90	105	120
Fuel additives (Petrol) *7		Except China, Brazil : Add every 10,000 km (6,500 miles) or 6 months For China, Brazil : Add every 5,000 km (3,000 miles) or 6 months							
Fuel filter (Petrol)	For China, Brazil	-	I	-	R	-	I	-	R
External fuel filter *8	Kappa 1.0L FFV	Replace every 10,000 km (6,500 miles)							
Fuel pump *8	Kappa 1.0L FFV	Inspect every 30,000 km (20,000 miles)							
Fuel lines, hoses and connections		-	-	-	I	-	-	-	I
Fuel tank air filter	For China	I	I	R	I	I	R	I	I
	Except China	-	I	-	R	-	I	-	R
Vapour hose and fuel filler cap		-	-	-	I	-	-	-	I
Air cleaner filter	Except China, India, Middle East	I	I	R	I	I	R	I	I
	For China, India, Middle East	R	R	R	R	R	R	R	R
Intercooler, in/out hose, air intake hose	Kappa 1.0L T-GDI	I	I	I	I	I	I	I	I
Exhaust system		I	I	I	I	I	I	I	I

I : Inspect and if necessary, adjust, correct, clean or replace. R : Replace or change.

MAINTENANCE INTERVALS / MAINTENANCE ITEM		Normal Maintenance Schedule - For Petrol Engine [Except Europe (Including Russia)]							
		Number of months or driving distance, whichever comes first							
	Months	12	24	36	48	60	72	84	96
	Miles×1,000	10	20	30	40	50	60	70	80
	Km×1,000	15	30	45	60	75	90	105	120
Cooling system		At first, Inspect 60,000 km (40,000 miles) or 48 months after that, Inspect every 30,000 km (20,000 miles) or 24 months							
Air conditioner compressor/refrigerant		I	I	I	I	I	I	I	I
Climate control air filter	Except Australia and New Zealand	R	R	R	R	R	R	R	R
	For Australia and New Zealand	I	R	I	R	I	R	I	R
Brake discs and pads		I	I	I	I	I	I	I	I
Brake drums and linings		-	I	-	I	-	I	-	I
Brake lines, hoses and connections		I	I	I	I	I	I	I	I
Brake/clutch fluid		I	R	I	R	I	R	I	R
Parking brake		-	I	-	I	-	I	-	I
Steering gear rack, linkage and boots		I	I	I	I	I	I	I	I
Suspension ball joints		I	I	I	I	I	I	I	I
Tyre (pressure & tread wear)		I	I	I	I	I	I	I	I
Battery condition		I	I	I	I	I	I	I	I

I : Inspect and if necessary, adjust, correct, clean or replace. R : Replace or change.

Maintenance Under Severe Usage Conditions
- For Petrol Engine [Except Europe (Including Russia)]

MAINTENANCE ITEM			MAINTENANCE OPERATION	MAINTENANCE INTERVALS	DRIVING CONDITION
Engine oil and engine oil filter	Kappa 1.0L T-GDI	Except China	R	Every 5,000 km (3,000 miles) or 6 months	A, B, C, D, E, F, G, H, I, J, K
		For China	R	Every 5,000 km (3,000 miles) or 3 months	A, B, C, D, E, F, G, H, I, J, K
	Kappa 1.0L MPI, Kappa 1.0L FFV, Kappa 1.2L MPI	Except Middle East, Central & South America, India, Libia, Iran, Algeria, Sudan, Morocco, Tunisia, Egypt, China	R	Every 7,500 km (5,000 miles) or 6 months	A, B, C, D, E, F, G, H, I, J, K
		For Middle East, Central & South America, India, Libia, Iran, Algeria, Sudan, Morocco, Tunisia, Egypt	R	Every 5,000 km (3,000 miles) or 6 months	A, B, C, D, E, F, G, H, I, J, K
		For China	R	Every 5,000 km (3,000 miles) or 3 months	A, B, C, D, E, F, G, H, I, J, K

MAINTENANCE ITEM	MAINTENANCE OPERATION	MAINTENANCE INTERVALS	DRIVING CONDITION
Spark plugs	R	Replace more frequently depending on the condition	B, H, I, K
Automatic transaxle fluid	R	Every 90,000 km (60,000 miles)	A, C, D, E, F, G, H, I, J
Manual transaxle fluid	R	Every 120,000 km (80,000 miles)	C, D, E, F, G, H, I, J
Drive shaft and boots	I	Inspect more frequently depending on the condition	C, D, E, F, G, H, I, J
Air cleaner filter	R	Replace more frequently depending on the condition	C, E
Climate control air filter	R	Replace more frequently depending on the condition	C, E, G
Brake discs and pads, calipers and rotors	I	Inspect more frequently depending on the condition	C, D, E, G, H
Brake drums and linings	I	Inspect more frequently depending on the condition	C, D, E, G, H
Parking brake	I	Inspect more frequently depending on the condition	C, D, G, H
Steering gear rack, linkage and boots	I	Inspect more frequently depending on the condition	C, D, E, F, G
Suspension ball joints	I	Inspect more frequently depending on the condition	C, D, E, F, G

Maintenance operation
I : Inspect and if necessary, adjust, correct, clean or replace. R : Replace or change.

SEVERE DRIVING CONDITIONS

A : Repeatedly driving short distance of less than 8 km (5miles) in normal temperature or less than 16 km (10 miles) in freezing temperature.

B : Extensive engine idling or low speed driving for long distances.

C : Driving on rough, dusty, muddy, unpaved, graveled or salt-spread roads.

D : Driving in areas using salt or other corrosive materials or in very cold weather

E : Driving in heavy dust condition.

F : Driving in heavy traffic area.

G : Driving on uphill, downhill, or mountain roads repeatedly.

H : Towing a trailer or using a camper on roof rack.

I : Driving for patrol car, taxi, other commercial use of vehicle towing.

J : Driving over 170 km/h (106 mile/h).

K : Frequently driving in stop-and-go conditions.

EXPLANATION OF SCHEDULED MAINTENANCE ITEMS

Engine oil and filter

The engine oil and filter should be changed at the intervals specified in the maintenance schedule. If the vehicle is being driven in severe conditions, more frequent oil and filter changes are required.

Drive belts

Inspect all drive belts for evidence of cuts, cracks, excessive wear or oil saturation and replace if necessary. Drive belts should be checked periodically for proper tension and adjusted as necessary.

⚠ CAUTION

When you are inspecting the belt, place the ignition switch in the LOCK/OFF or ACC position.

Fuel filter (for petrol)

Kia petrol vehicle is equipped a lifetime fuel filter that integrated with the fuel tank. Regular maintenance or replacement is not needed but depends on fuel quality. If there are some important safety matters like fuel flow restriction, surging, loss of power, hard starting problem etc, fuel filter inspection or replace is needed.

Have the fuel filter inspected or replaced by a professional workshop. Kia recommends to visit an authorised Kia dealer/service partner.

Fuel lines, fuel hoses and connections

Check the fuel lines, fuel hoses and connections for leakage and damage. Have the fuel lines, fuel hoses and connections replaced by a professional workshop. Kia recommends to visit an authorised Kia dealer/service partner.

Vapour hose (for Petrol, FFV engine) and fuel filler cap

The vapour hose and fuel filler cap should be inspected at those intervals specified in the maintenance schedule. Make sure that a new vapour hose or fuel filler cap is correctly replaced.

Vacuum crankcase ventilation hoses (if equipped)

Inspect the surface of hoses for evidence of heat and/or mechanical damage. Hard and brittle rubber, cracking, tears, cuts, abrasions, and excessive swelling indicate deterioration. Particular attention should be paid to examine those hose surfaces nearest to high heat sources, such as the exhaust manifold.
Inspect the hose routing to assure that the hoses do not come in contact with any heat source, sharp edges or moving component which might cause heat damage or mechanical wear. Inspect all hose connections, such as clamps and couplings, to make sure they are secure, and that no leaks are present. Hoses should be replaced immediately if there is any evidence of deterioration or damage.

Air cleaner filter

Have the air cleaner filter replaced by a professional workshop. Kia recommends to visit an authorised Kia dealer/service partner.

Spark plugs (for Petrol, FFV engine)

Make sure to install new spark plugs of the correct heat range.

⚠ WARNING

Do not disconnect and inspect spark plugs when the engine is hot. You may burn yourself.

Valve clearance (for Kappa 1.0L T-GDI, Kappa 1.0L MPI, FFV engine)

Inspect for excessive valve noise and/or engine vibration and adjust if necessary. In this case, have the system serviced by a professional workshop. Kia recommends to visit an authorised Kia dealer/service partner.

Cooling system

Check the cooling system components, such as the radiator, coolant reservoir, hoses and connections for leakage and damage. Replace any damaged parts.

Coolant

The coolant should be changed at the intervals specified in the maintenance schedule.

Manual transaxle fluid (if equipped)

Inspect the manual transaxle fluid according to the maintenance schedule.

Automatic transaxle fluid (if equipped)

The fluid level should be in the "HOT" range of the dipstick, after the engine and transaxle are at normal operating temperature. Check the automatic transaxle fluid level with the engine running and the transaxle in neutral, with the parking brake properly applied.

Brake hoses and lines

Visually check for proper installation, chafing, cracks, deterioration and any leakage. Replace any deteriorated or damaged parts immediately.

Brake/Clutch fluid (if equipped)

Check the brake/clutch fluid level in the brake/clutch fluid reservoir. The level should be between “MIN” and “MAX” marks on the side of the reservoir. Use only hydraulic brake/clutch fluid conforming to DOT 3 or DOT 4 specification.

Parking brake

Inspect the parking brake system including the parking brake lever (or pedal) and cables.

Brake discs, pads, calipers and rotors

Check the pads for excessive wear, discs for run out and wear, and calipers for fluid leakage.

For more information on checking the pads or lining wear limit, we recommend to refer to the Kia web site.

(**www.Kia-hotline.com**)

Suspension mounting bolts

Check the suspension connections for looseness or damage. Retighten to the specified torque.

Steering gear box, linkage & boots/lower arm ball joint

With the vehicle stopped and engine off, check for excessive free-play in the steering wheel.

Check the linkage for bends or damage. Check the dust boots and ball joints for deterioration, cracks, or damage. Replace any damaged parts.

Drive shafts and boots

Check the drive shafts, boots and clamps for cracks, deterioration, or damage. Replace any damaged parts and, if necessary, repack the grease.

Air conditioning refrigerant (if equipped)

Check the air conditioning lines and connections for leakage and damage.

ENGINE OIL

Checking the engine oil level

■ Kappa 1.0L MPI (Petrol, FFV)

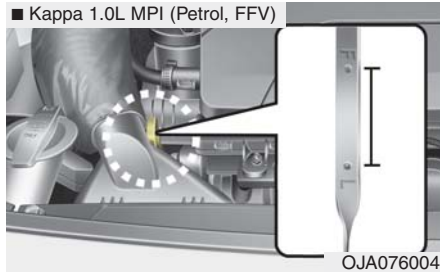

OJA076004

■ Kappa 1.0L T-GDI (Petrol)

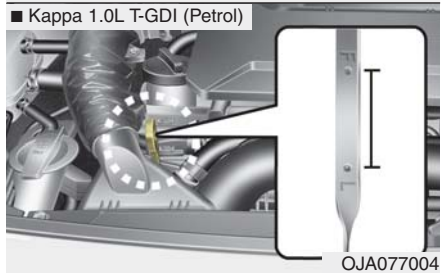

OJA077004

■ Kappa 1.2L MPI (Petrol)

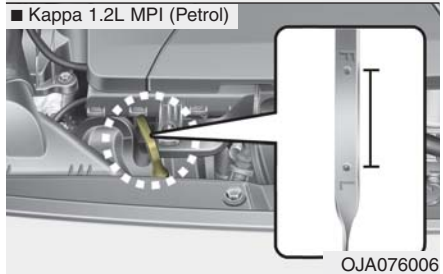

OJA076006

1. Be sure the vehicle is on level ground.
2. Start the engine and allow it to reach normal operating temperature.
3. Turn the engine off and wait for a few minutes (about 5 minutes) for the oil to return to the oil pan.
4. Pull the dipstick out, wipe it clean, and re-insert it fully.

⚠ WARNING - Radiator hose

Be very careful not to touch the radiator hose when checking or adding the engine oil as it may be hot enough to burn you.

5. Pull the dipstick out again and check the level. The level should be between F (Full) and L (Low).

⚠ CAUTION

- ***Do not overfill the engine oil. It may damage the engine.***
- ***Do not spill engine oil, when adding or changing engine oil. If you drop the engine oil on the engine room, wipe it off immediately.***
- ***When you wipe the oil level gauge, you should wipe it with a clean cloth. When mixed with debris, it can cause engine damage.***

■ Kappa 1.0L MPI (Petrol, FFV)

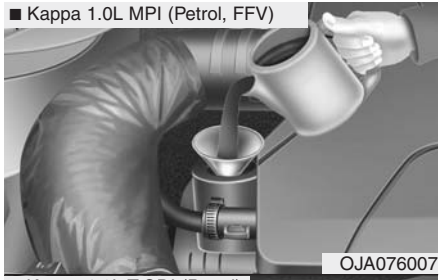

OJA076007

■ Kappa 1.0L T-GDI (Petrol)

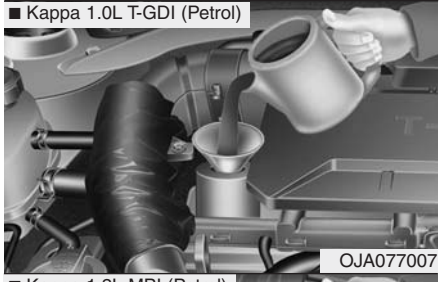

OJA077007

■ Kappa 1.2L MPI (Petrol)

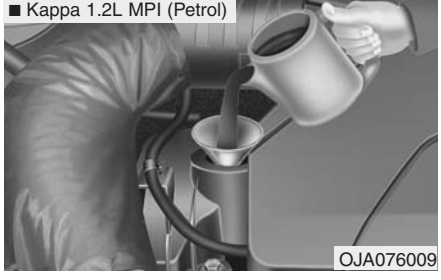

OJA076009

If it is near or at L (Low), add enough oil to bring the level to F (Full). **Do not overfill.**

Use a funnel to help prevent oil from being spilled on engine components.

Use only the specified engine oil. (Refer to "Recommended lubricants and capacities" in chapter 9.)

Changing the engine oil and filter

Have the engine oil and filter replaced by a professional workshop. Kia recommends to visit an authorised Kia dealer/service partner.

⚠ WARNING

Used engine oil may cause skin irritation or cancer if left in contact with the skin for prolonged periods of time. Used engine oil contains chemicals that have caused cancer in laboratory animals. Always protect your skin by washing your hands thoroughly with soap and warm water as soon as possible after handling used oil.

ENGINE COOLANT (KAPPA 1.0L MPI (PETROL, FFV), KAPPA 1.2L MPI)

The high-pressure cooling system has a reservoir filled with year round antifreeze coolant. The reservoir is filled at the factory.

Check the antifreeze protection and coolant level at least once a year, at the beginning of the winter season, and before travelling to a colder climate.

⚠ CAUTION

- ***When the engine overheats from low engine coolant, suddenly adding engine coolant may cause cracks in the engine. To prevent damage, add engine coolant slowly in small quantities.***
- ***Do not drive with no engine coolant. It may cause water pump failure and engine seizure, etc.***

Checking the coolant level

⚠ WARNING



Removing radiator cap

- **Never attempt to remove the radiator cap whilst the engine is operating or hot. Doing so might lead to cooling system and engine damage. Also, hot coolant or steam could cause serious personal injury.**
- **Turn the engine off and wait until it cools down. Use extreme care when removing the radiator cap. Wrap a thick towel around it, and turn it counterclockwise slowly to the first stop. Step back whilst the pressure is released from the cooling system.**

(Continued)

(Continued)

When you are sure all the pressure has been released, press down on the cap, using a thick towel, and continue turning counterclockwise to remove it.

- **Even if the engine is not operating, do not remove the radiator cap or the drain plug whilst the engine and radiator are hot. Hot coolant and steam may still blow out under pressure, causing serious injury.**

⚠ WARNING



The electric motor (cooling fan) is controlled by engine coolant temperature, refrigerant pressure and vehicle speed. It may sometimes operate even when the engine is not running. Use extreme caution when working near the blades of the cooling fan so that you are not injured by a rotating fan blades. As the engine coolant temperature decreases, the electric motor will automatically shut off. This is a normal condition.

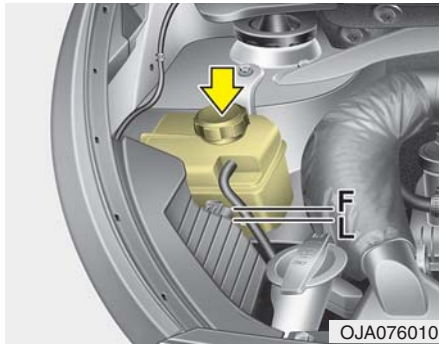

Check the condition and connections of all cooling system hoses and heater hoses. Replace any swollen or deteriorated hoses.

The coolant level should be filled between MAX and MIN (F and L) marks on the side of the coolant reservoir when the engine is cool.

If the coolant level is low, add enough distilled (deionized) or soft water. Bring the level to MAX (F), but do not overfill.

If frequent additions are required, have the system inspected by a professional workshop. Kia recommends to visit an authorised Kia dealer/service partner.

Recommended engine coolant

- When adding coolant, use only deionized water or soft water for your vehicle and never mix hard water in the coolant filled at the factory. An improper coolant mixture can result in serious malfunction or engine damage.
- The engine in your vehicle has aluminum engine parts and must be protected by an ethylene-glycol with phosphate based coolant to prevent corrosion and freezing.
- DO NOT USE alcohol or methanol coolant or mix them with the specified coolant.
- Do not use a solution that contains more than 60% antifreeze or less than 35% antifreeze, which would reduce the effectiveness of the solution.

For mixture percentage, refer to the following table.

Ambient Temperature	Mixture Percentage (volume)	
	Antifreeze	Water
-15°C (5°F)	35	65
-25°C (-13°F)	40	60
-35°C (-31°F)	50	50
-45°C (-49°F)	60	40

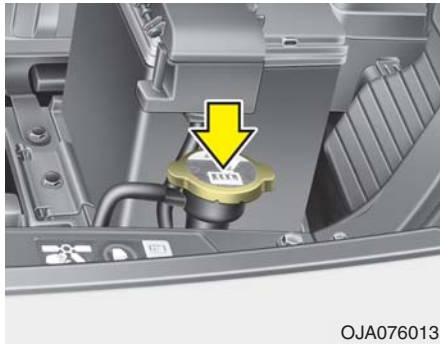
OJA076013

⚠ WARNING



Radiator cap

Do not remove the radiator cap when the engine and radiator are hot. Scalding hot coolant and steam may blow out under pressure causing serious injury.

Changing the coolant

Have the coolant replaced by a professional workshop. Kia recommends to visit an authorised Kia dealer/service partner.

⚠ CAUTION

Put a thick cloth around the radiator cap before refilling the coolant in order to prevent the coolant from overflowing into engine parts such as the alternator.

⚠ WARNING - Coolant

- **Do not use radiator coolant or antifreeze in the washer fluid reservoir.**
- **Radiator coolant can severely obscure visibility when sprayed on the windscreen and may cause loss of vehicle control or damage the paint and body trim.**

ENGINE COOLANT (KAPPA 1.0L T-GDI)

The high-pressure cooling system has a reservoir filled with year round antifreeze coolant. The reservoir is filled at the factory.

Check the antifreeze protection and coolant level at least once a year, at the beginning of the winter season, and before travelling to a colder climate.

⚠ CAUTION

- ***When the engine overheats from low engine coolant, suddenly adding engine coolant may cause cracks in the engine. To prevent damage, add engine coolant slowly in small quantities.***
- ***Do not drive with no engine coolant. It may cause water pump failure and engine seizure, etc.***

Checking the coolant level

⚠ WARNING



Removing radiator cap

- **Never attempt to remove the radiator cap whilst the engine is operating or hot. Doing so might lead to cooling system and engine damage. Also, hot coolant or steam could cause serious personal injury.**
- **Turn the engine off and wait until it cools down. Use extreme care when removing the radiator cap. Wrap a thick towel around it, and turn it counterclockwise slowly to the first stop. Step back whilst the pressure is released from the cooling system.**

(Continued)

(Continued)

When you are sure all the pressure has been released, press down on the cap, using a thick towel, and continue turning counterclockwise to remove it.

- **Even if the engine is not operating, do not remove the radiator cap or the drain plug whilst the engine and radiator are hot. Hot coolant and steam may still blow out under pressure, causing serious injury.**

⚠ WARNING



The electric motor (cooling fan) is controlled by engine coolant temperature, refrigerant pressure and vehicle speed. It may sometimes operate even when the engine is not running. Use extreme caution when working near the blades of the cooling fan so that you are not injured by a rotating fan blades. As the engine coolant temperature decreases, the electric motor will automatically shut off. This is a normal condition.

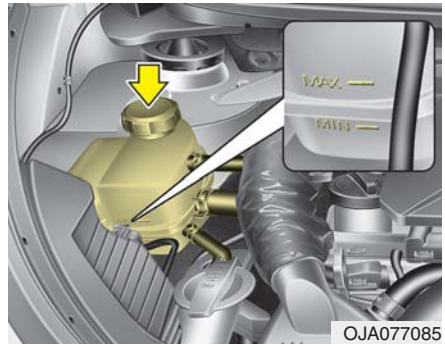

Check the condition and connections of all cooling system hoses and heater hoses. Replace any swollen or deteriorated hoses.

The coolant level should be filled between MAX and MIN marks on the side of the coolant reservoir when the engine is cool.

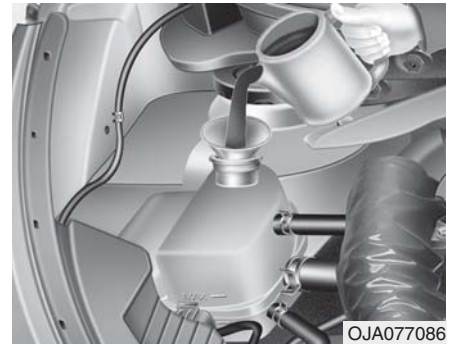

If the coolant level is low, add enough distilled (deionized) or soft water. Bring the level to MAX, but do not overfill.

If frequent additions are required, have the system inspected by a professional workshop. Kia recommends to visit an authorised Kia dealer/service partner.

✻ NOTICE

Make sure the coolant cap is properly closed after refill of coolant. Otherwise the engine could be overheated whilst driving.

■ Engine room front view

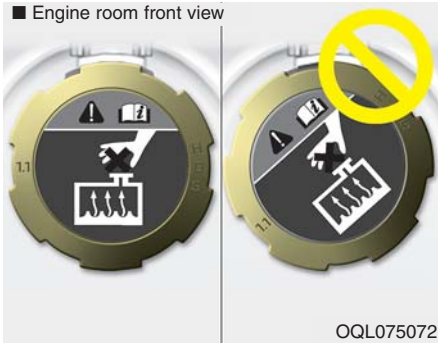

OQL075072

1. Check if the radiator cap label is straight In front.

■ Engine room rear view

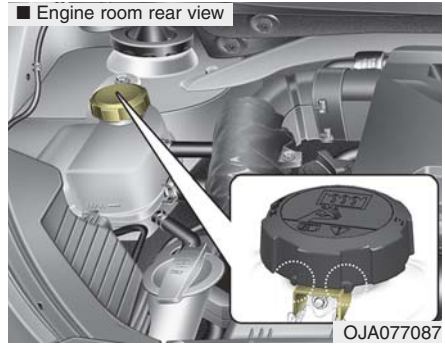

OJA077087

2. Make sure that the tiny protrusions inside the coolant cap should be securely interlocked.

Recommended engine coolant

- When adding coolant, use only deionized water or soft water for your vehicle and never mix hard water in the coolant filled at the factory. An improper coolant mixture can result in serious malfunction or engine damage.
- The engine in your vehicle has aluminum engine parts and must be protected by an ethylene-glycol with phosphate based coolant to prevent corrosion and freezing.
- DO NOT USE alcohol or methanol coolant or mix them with the specified coolant.
- Do not use a solution that contains more than 60% antifreeze or less than 35% antifreeze, which would reduce the effectiveness of the solution.

For mixture percentage, refer to the following table.

Ambient Temperature	Mixture Percentage (volume)	
	Antifreeze	Water
-15°C (5°F)	35	65
-25°C (-13°F)	40	60
-35°C (-31°F)	50	50
-45°C (-49°F)	60	40

Changing the coolant

Have the coolant replaced by a professional workshop. Kia recommends to visit an authorised Kia dealer/service partner.

⚠ CAUTION

Put a thick cloth around the radiator cap before refilling the coolant in order to prevent the coolant from overflowing into engine parts such as the alternator.

⚠ WARNING - Coolant

- **Do not use radiator coolant or antifreeze in the washer fluid reservoir.**
- **Radiator coolant can severely obscure visibility when sprayed on the windscreen and may cause loss of vehicle control or damage the paint and body trim.**

BRAKE/CLUTCH FLUID (IF EQUIPPED)

Checking the brake/clutch fluid level

■ Kappa 1.0L MPI (Petrol, FFV)
Kappa 1.2L MPI (Petrol)

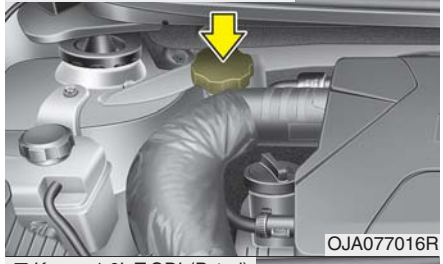

■ Kappa 1.0L T-GDI (Petrol)

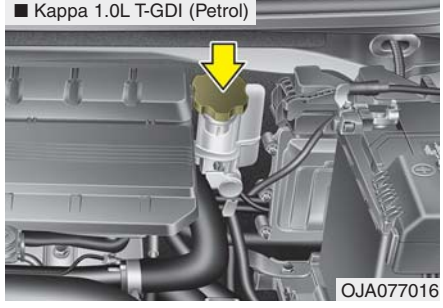

Check the fluid level in the reservoir periodically. The fluid level should be between MAX and MIN marks on the side of the reservoir.

Before removing the reservoir cap and adding brake/clutch fluid, clean the area around the reservoir cap thoroughly to prevent brake/clutch fluid contamination.

If the level is low, add fluid to the MAX level. The level will fall with accumulated mileage. This is a normal condition associated with the wear of the brake linings.

If the fluid level is excessively low, have the system checked by a professional workshop. Kia recommends to visit an authorised Kia dealer/service partner.

Use only the specified brake fluid. (Refer to “Recommended lubricants or capacities” in chapter 9.)

Never mix different types of fluid.

⚠ WARNING
- Loss of brake/clutch fluid

In the event the brake/clutch system requires frequent additions of fluid, have the system Inspected by a professional workshop. Kia recommends to visit an authorised Kia dealer/service partner.

⚠ WARNING - Brake / clutch fluid

When changing and adding brake/clutch fluid, handle it carefully. Do not let it come in contact with your eyes. If brake/clutch fluid should come in contact with your eyes, immediately flush them with a large quantity of fresh tap water. Have your eyes examined by a doctor as soon as possible.

⚠ CAUTION

Do not allow brake/clutch fluid to contact the vehicle's body paint, as paint damage will result. Brake/clutch fluid, which has been exposed to open air for an extended time should never be used as its quality cannot be guaranteed. It should be properly disposed. Don't put in the wrong kind of fluid. A few drops of mineral-based oil, such as engine oil, in your brake/clutch system can damage brake/clutch system parts.

AUTOMATIC TRANSAXLE FLUID (IF EQUIPPED)

Checking the automatic transaxle fluid level

■ Kappa 1.0L MPI (Petrol, FFV)
Kappa 1.2L MPI (Petrol)

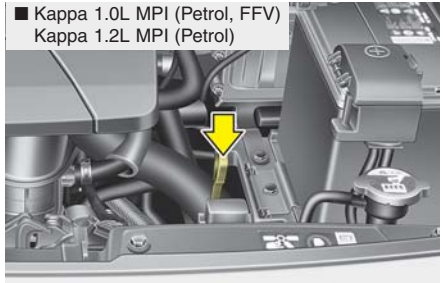

OJA076017

■ Kappa 1.0L T-GDI (Petrol)

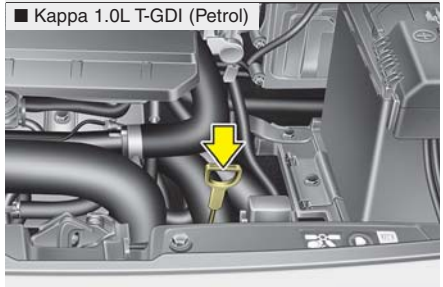

OJA077017

The automatic transaxle fluid level should be checked regularly.

Keep the vehicle on level ground with the parking brake applied and check the fluid level according to the following procedure.

1. Place the shift lever in N (Neutral) position and confirm if the engine is running at normal idle speed.

✻ NOTICE

Insert the level gauge, after checking the automatic transaxle fluid level. In the direction referred in the picture.

⚠ CAUTION

If you insert the level gauge in the wrong direction, it can cause deformation (or damage) to level gauge.

2. After the transaxle is warmed up sufficiently [fluid temperature 70~80°C (158~176°F)], for example by 10 minutes usual driving, move the shift lever through all positions then place the shift lever in N(Neutral) or P(Park) position.

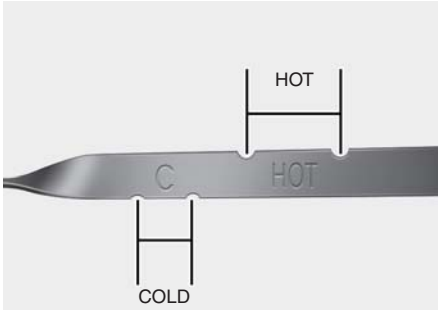

OJA076077

3. Confirm if the fluid level is in the "HOT" range on the level gauge. If the fluid level is lower, add the specified fluid from the fill hole. If the fluid level is higher, drain the fluid from the drain hole.
4. If the fluid level is checked in cold condition [fluid temperature 20~30°C (68~86°F)], add the fluid to the "COLD" line and then recheck the fluid level according to the above step 2.

⚠ WARNING - Transaxle fluid

The transaxle fluid level should be checked when the engine is at normal operating temperature. This means that the engine, radiator, radiator hose and exhaust system etc., are very hot. Exercise great care not to burn yourself during this procedure.

⚠ CAUTION

- ***Low fluid level causes transaxle shift slippage. Overfilling can cause foaming, loss of fluid and transaxle malfunction.***
- ***The use of a non-specified fluid could cause transaxle malfunction and failure.***

⚠ WARNING - Parking brake

To avoid sudden movement of the vehicle, apply the parking brake and depress the brake pedal before moving the shift lever.

✻ NOTICE

The "COLD" range is for reference only and should NOT be used to determine the transaxle fluid level.

✻ NOTICE

New automatic transaxle fluid should be red. The red dye is added so the assembly plant can identify it as automatic transaxle fluid and distinguish it from engine oil or antifreeze. The red dye, which is not an indicator of fluid quality, is not permanent. As the vehicle is driven, the automatic transaxle fluid will begin to look darker. The colour may eventually appear light brown.

Use only the specified automatic transaxle fluid. (Refer to "Recommended lubricants or capacities" in chapter 9.)

Changing the automatic transaxle fluid

Have the automatic transaxle fluid changed by a professional workshop according to the maintenance schedule. Kia recommends to visit an authorised Kia dealer/service partner.

WASHER FLUID

Checking the washer fluid level

■ Kappa 1.0L MPI (Petrol, FFV)
Kappa 1.2L MPI (Petrol)

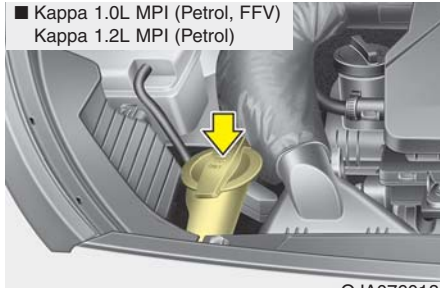

OJA076018

■ Kappa 1.0L T-GDI (Petrol)

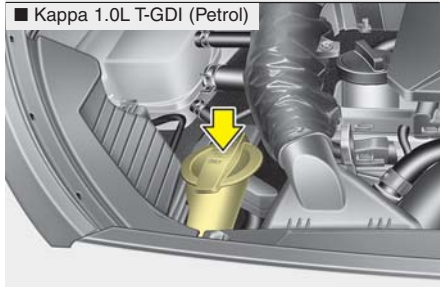

OJA077018

The reservoir is translucent so that you can check the level with a quick visual inspection.

Check the fluid level in the washer fluid reservoir and add fluid if necessary. Plain water may be used if washer fluid is not available. However, use washer solvent with antifreeze characteristics in cold climates to prevent freezing.

⚠ WARNING - Coolant

- **Do not use radiator coolant or antifreeze in the washer fluid reservoir.**
- **Radiator coolant can severely obscure visibility when sprayed on the windscreen and may cause loss of vehicle control or damage to paint and body trim.**
- **Windscreen Washer fluid agents contain some amounts of alcohol and can be flammable under certain circumstances. Do not allow sparks or flame to contact the washer fluid or the washer fluid reservoir. Damage to the vehicle or occupants could occur.**
- **Windscreen washer fluid is poisonous to humans and animals. Do not drink and avoid contacting windscreen washer fluid. Serious injury or death could occur.**

PARKING BRAKE

Checking the parking brake

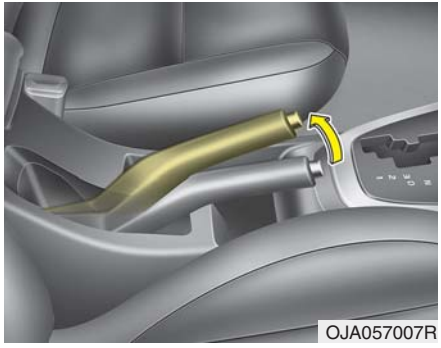

Check the stroke of the parking brake by counting the number of “clicks” heard whilst fully applying it from the released position. Also, the parking brake alone should securely hold the vehicle on a fairly steep grade. If the stroke is more or less than specified, have the system serviced by a professional workshop. Kia recommends to visit an authorised Kia dealer/service partner.

Stroke : 5~7 “clicks” at a force of 20 kg (44 lbs, 196 N).

AIR CLEANER (KAPPA 1.0L MPI (PETROL, FFV), KAPPA 1.2L MPI (PETROL))

Filter replacement

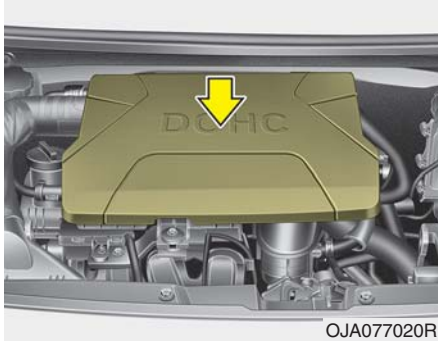

OJA077020R

It must be replaced when necessary, and should not be washed.

You can clean the filter when inspecting the air cleaner element.

Clean the filter by using compressed air.

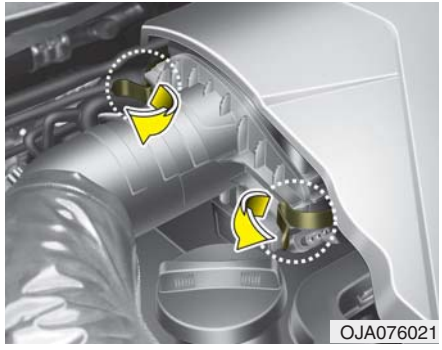
OJA076021

1. Loosen the air cleaner cover attaching clips and remove the air cleaner hose.

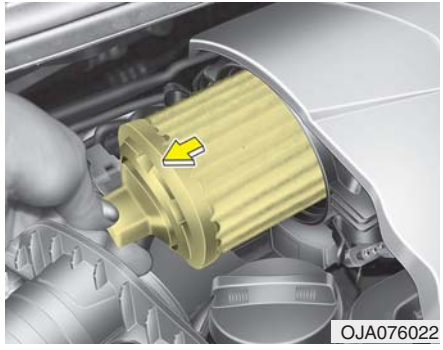
OJA076022

2. Wipe the inside of the air cleaner hose.
3. Replace the air cleaner filter.
4. Lock the air cleaner hose with the cover attaching clips.

Replace the filter according to the Maintenance Schedule.

If the vehicle is operated in extremely dusty or sandy areas, replace the element more often than the usual recommended intervals. (Refer to “Maintenance under severe usage conditions” in this chapter.)

⚠ CAUTION

- ***Do not drive with the air cleaner removed; this will result in excessive engine wear.***
- ***When removing the air cleaner filter, be careful that dust or dirt does not enter the air intake, or damage may result.***
- ***Use parts for replacement from a professional workshop. Kia recommends to visit an authorised Kia dealer/service partner.***

AIR CLEANER (KAPPA 1.0L T-GDI)

Filter replacement

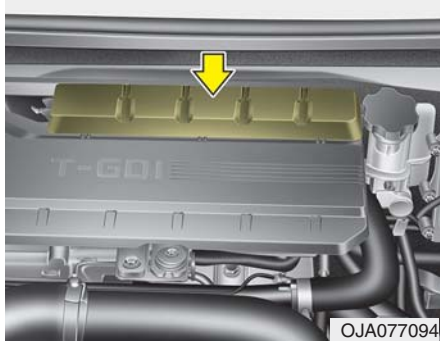

It must be replaced when necessary, and should not be washed.

You can clean the filter when inspecting the air cleaner element.

Clean the filter by using compressed air.



1. Loosen the air cleaner cover attaching clips and open the cover.





2. Unlock by turning the locking lever downward.
3. Pull the air cleaner filter to replace.



4. Pull up the lever to the LOCK position.
5. Check if the cover is firmly installed.

Replace the filter according to the Maintenance Schedule.

If the vehicle is operated in extremely dusty or sandy areas, replace the element more often than the usual recommended intervals. (Refer to “Maintenance under severe usage conditions” in this chapter.)

⚠ CAUTION

- ***Do not drive with the air cleaner removed; this will result in excessive engine wear.***
- ***When removing the air cleaner filter, be careful that dust or dirt does not enter the air intake, or damage may result.***
- ***Use parts for replacement from a professional workshop. Kia recommends to visit an authorised Kia dealer/service partner.***

CLIMATE CONTROL AIR FILTER

Filter inspection

The climate control air filter should be replaced according to the maintenance schedule. If the vehicle is operated in severely air-polluted cities or on dusty rough roads for a long period, it should be inspected more frequently and replaced earlier. When you replace the climate control air filter, replace it performing the following procedure, and be careful to avoid damaging other components.



1. With the glove box open, lower the glove box by pushing both sides.

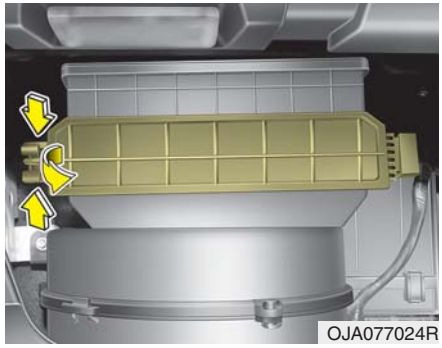

2. Remove the climate control air filter cover whilst pressing the lock on the left side of the cover.


OQL075021

3. Replace the climate control air filter.
4. Reassemble in the reverse order of disassembly.

✻ NOTICE

When replacing the climate control air filter install it properly. Otherwise, the system may produce noise and the effectiveness of the filter may be reduced.

WIPER BLADES

Blade inspection

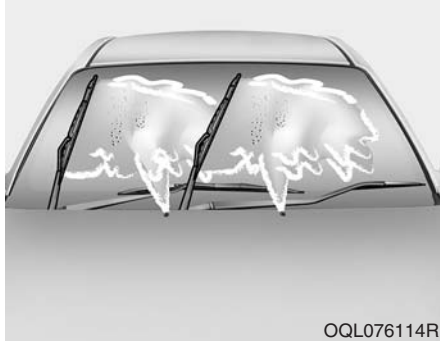

OQL076114R

✻ NOTICE

Commercial hot waxes applied by automatic car washes have been known to make the windscreen difficult to clean.

Contamination of either the windscreen or the wiper blades with foreign matter can reduce the effectiveness of the windscreen wipers. Common sources of contamination are insects, tree sap, and hot wax treatments used by some commercial car washes. If the blades are not wiping properly, clean both the window and the blades with a good cleaner or mild detergent, and rinse thoroughly with clean water.

⚠ CAUTION

To prevent damage to the wiper blades, do not use petrol, kerosene, paint thinner, or other solvents on or near them.

Blade replacement

When the wipers no longer clean adequately, the blades may be worn or cracked, and require replacement.

⚠ CAUTION

To prevent damage to the wiper arms or other components, do not attempt to move the wipers manually.

⚠ CAUTION

The use of a non-specified wiper blade could result in wiper malfunction and failure.

Front windscreen wiper blade

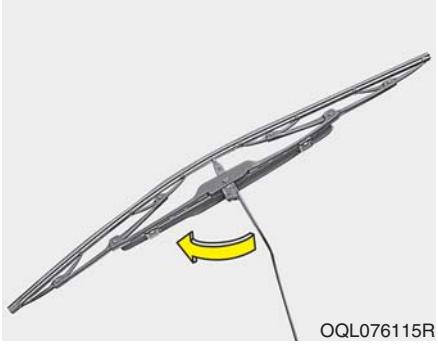

Type A

1. Raise the wiper arm and turn the wiper blade assembly to expose the plastic locking clip.

⚠ CAUTION

Do not allow the wiper arm to fall against the windscreen, since it may chip or crack the windscreen.

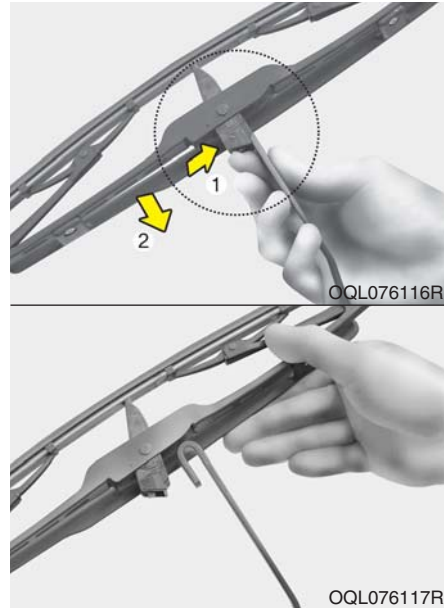

2. Compress the clip (1) and slide the blade assembly downward (2).
3. Lift it off the arm.
4. Install the blade assembly in the reverse order of removal.

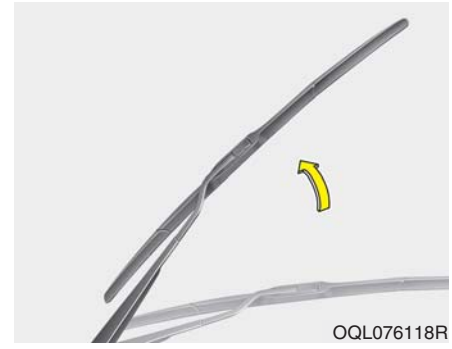

Type B

1. Raise the wiper arm.

⚠ CAUTION

Do not allow the wiper arm to fall against the windscreen, since it may chip or crack the windscreen.

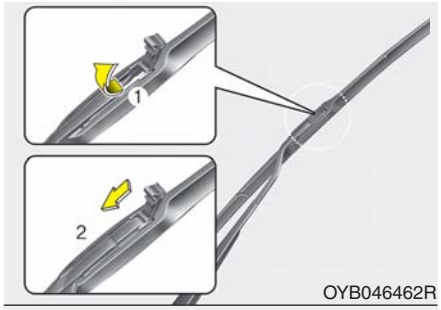

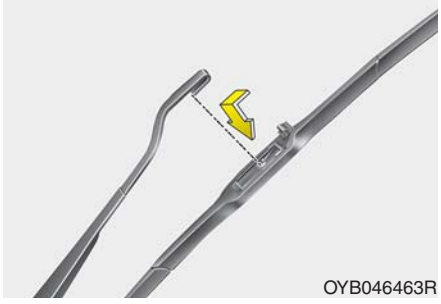

2. Lift up the wiper blade clip (1). Then pull down the blade assembly (2) and remove it.
3. Install the new blade assembly.

Rear window wiper blade

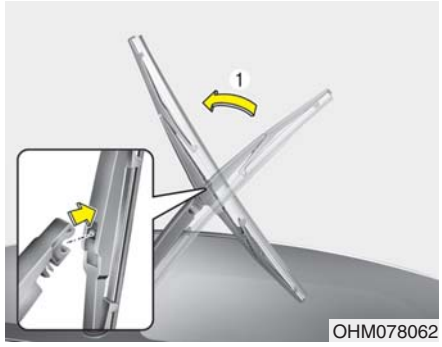

1. Raise the wiper arm (1) and pull out the wiper blade assembly.

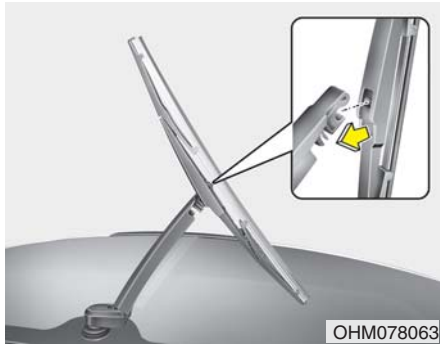

2. Install the new blade assembly by inserting the centre part into the slot in the wiper arm until it clicks into place.
3. Make sure the blade assembly is installed firmly by trying to pull it slightly.

To prevent damage to the wiper arms or other components, have the wiper blade replaced by a professional workshop. Kia recommends to visit an authorised Kia dealer/service partner.

BATTERY

For best battery service

■ Kappa 1.0L MPI (Petrol, FFV)
Kappa 1.2L MPI (Petrol)

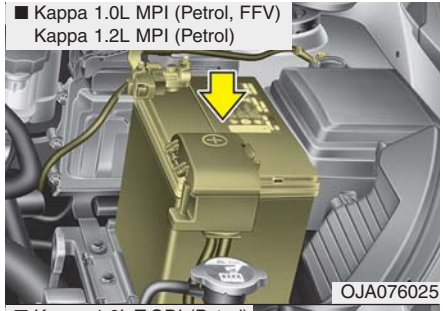

■ Kappa 1.0L T-GDI (Petrol)

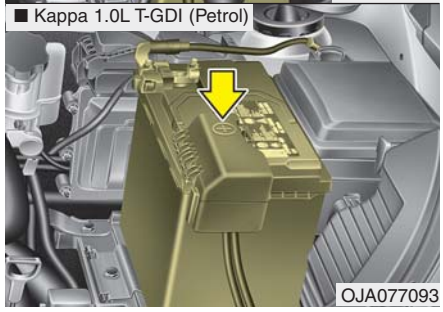

- Keep the battery securely mounted.
- Keep the battery top clean and dry.
- Keep the terminals and connections clean, tight, and coated with petroleum jelly or terminal grease.
- Rinse any spilled electrolyte from the battery immediately with a solution of water and baking soda.
- If the vehicle is not going to be used for an extended time, disconnect the battery cables.

✻ NOTICE

Basically equipped battery is maintenance free type. If your vehicle is equipped with the battery marked with LOWER and UPPER on the side, you can check the electrolyte level. The electrolyte level should be between LOWER and UPPER. If the electrolyte level is low, it needs to add distilled (demineralized) water (Never add sulfuric acid or other electrolyte). When refill, be careful not to splash the battery and adjacent components. And do not overfill the battery cells. It can cause corrosion on other parts. After then ensure that tighten the cell caps. Contact a professional workshop. Kia recommends to visit an authorised Kia dealer/service partner.

⚠ WARNING - Battery dangers

Always read the following instructions carefully when handling a battery.

Keep lighted cigarettes and all other flames or sparks away from the battery.

Hydrogen, a highly combustible gas, is always present in battery cells and may explode if ignited.

Keep batteries out of the reach of children because batteries contain highly corrosive SULFURIC ACID. Do not allow battery acid to contact your skin, eyes, clothing or paint finish.

(Continued)

(Continued)



If any electrolyte gets into your eyes, flush your eyes with clean water for at least 15 minutes and get immediate medical attention.

If electrolyte gets on your skin, thoroughly wash the contacted area. If you feel pain or burning sensation, get medical attention immediately.



Wear eye protection when charging or working near a battery. Always provide ventilation when working in an enclosed space.



An inappropriately disposed battery can be harmful to the environment and human health. Dispose the battery according to your local law(s) or regulation.

(Continued)

(Continued)



The battery contains lead. Do not dispose of it after use. Contact a professional workshop. Kia recommends to visit an authorised Kia dealer/service partner.

- **When lifting a plastic-cased battery, excessive pressure on the case may cause battery acid to leak, resulting in personal injury. Lift with a battery carrier or with your hands on opposite corners.**
- **Never attempt to recharge the battery when the battery cables are connected.**
- **The electrical ignition system works with high voltage. Never touch these components with the engine running or the ignition switched on.**

Failure to follow the above warnings can result in serious bodily injury or death.

⚠ CAUTION

- ***When you don't use the vehicle for a long time in the low temperature area, separate the battery and keep it indoors.***
- ***Always charge the battery fully to prevent battery case damage in low temperature area.***
- ***If you connect unauthorised electronic devices to the battery, the battery may be discharged. Never use unauthorised devices.***

Battery capacity label

■ Example

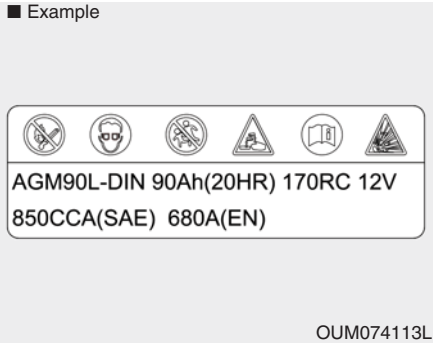

❉ The actual battery label in the vehicle may differ from the illustration.

1. AGM90L-DIN : The Kia model name of battery
2. 90Ah(20HR) : The nominal capacity (in Ampere hours)
3. 170RC : The nominal reserve capacity (in min.)
4. 12V : The nominal voltage
5. 850CCA (SAE) : The cold-test current in amperes by SAE
6. 680A : The cold-test current in amperes by EN

Battery recharging

Your vehicle has a maintenance-free, calcium-based battery.

- If the battery becomes discharged in a short time (because, for example, the headlights or interior lights were left on whilst the vehicle was not in use), recharge it by slow charging (trickle) for 10 hours.
- If the battery gradually discharges because of high electric load whilst the vehicle is being used, recharge it at 20-30A for two hours.

⚠ WARNING - Recharging battery

When recharging the battery, observe the following precautions:

- **The battery must be removed from the vehicle and placed in an area with good ventilation.**
- **Do not allow cigarettes, sparks, or flame near the battery.**
- **Watch the battery during charging, and stop or reduce the charging rate if the battery cells begin gassing (boiling) violently or if the temperature of the electrolyte of any cell exceeds 49°C (120°F).**
- **Wear eye protection when checking the battery during charging.**

(Continued)

(Continued)

- **Disconnect the battery charger in the following order.**
  1. **Turn off the battery charger main switch.**
  2. **Unhook the negative clamp from the negative battery terminal.**
  3. **Unhook the positive clamp from the positive battery terminal.**

⚠ WARNING

- **Before performing maintenance or recharging the battery, turn off all accessories and stop the engine.**
- **The negative battery cable must be removed first and installed last when the battery is disconnected.**
- **Operation related to the battery is recommended to be done by a professional workshop. Kia recommends to visit an authorised Kia dealer/service partner.**

⚠ CAUTION

- ***Keep the battery away from water or any liquid.***
- ***For your safety, use parts for replacement from a professional workshop. Kia recommends to visit an authorised Kia dealer/service partner.***

Reset items

Items should be reset after the battery has been discharged or the battery has been disconnected.

- Auto up/down window
- Sunroof
- Trip computer
- Climate control system
- Audio

TYRES AND WHEELS

Tyre care

For proper maintenance, safety, and maximum fuel economy, you must always maintain recommended tyre inflation pressures and stay within the load limits and weight distribution recommended for your vehicle.

Recommended cold tyre inflation pressures

All tyre pressures (including the spare) should be checked when the tyres are cold. “Cold Tyres” means the vehicle has not been driven for at least three hours or driven less than 1.6 km (one mile).

Recommended pressures must be maintained for the best ride, top vehicle handling, and minimum tyre wear.

For recommended inflation pressure, refer to “Tyre and wheels” in chapter 9.



OJA087004R

All specifications (sizes and pressures) can be found on a label attached to the vehicle.

⚠ WARNING - Tyre underinflation

Severe underinflation (70 kPa (10 psi) or more) can lead to severe heat build-up, causing blowouts, tread separation and other tyre failures that can result in the loss of vehicle control leading to severe injury or death. This risk is much higher on hot days and when driving for long periods at high speeds.

⚠ CAUTION

- ***Underinflation also results in excessive wear, poor handling and reduced fuel economy. Wheel deformation also is possible. Keep your tyre pressures at the proper levels. If a tyre frequently needs refilling, have the system checked by a professional workshop. Kia recommends to visit an authorised Kia dealer/service partner.***
- ***Overinflation produces a harsh ride, excessive wear at the centre of the tyre tread, and a greater possibility of damage from road hazards.***

⚠ CAUTION

- ***Warm tyres normally exceed recommended cold tyre pressures by 28 to 41 kPa (4 to 6 psi). Do not release air from warm tyres to adjust the pressure or the tyres will be underinflated.***
- ***Be sure to reinstall the tyre inflation valve caps. Without the valve cap, dirt or moisture could get into the valve core and cause air leakage. If a valve cap is missing, install a new one as soon as possible.***

⚠ WARNING - Tyre Inflation

Overinflation or underinflation can reduce tyre life, adversely affect vehicle handling, and lead to sudden tyre failure. This could result in loss of vehicle control and potential injury.

⚠ CAUTION - Tyre pressure

Always observe the following:

- ***Check tyre pressure when the tyres are cold. (After vehicle has been parked for at least three hours or hasn't been driven more than 1.6 km (one mile) since startup.)***
- ***Check the pressure of your spare tyre each time you check the pressure of other tyres.***
- ***Never overload your vehicle. Be careful not to overload a vehicle luggage rack if your vehicle is equipped with one.***
- ***Worn, old tyres can cause accidents. If your tread is badly worn, or if your tyres have been damaged, replace them.***

Checking tyre inflation pressure

Check your tyres once a month or more.

Also, check the tyre pressure of the spare tyre.

How to check

Use a good quality gauge to check tyre pressure. You can not tell if your tyres are properly inflated simply by looking at them. Radial tyres may look properly inflated even when they're underinflated.

Check the tyre's inflation pressure when the tyres are cold. - "Cold" means your vehicle has been sitting for at least three hours or driven no more than 1.6 km (1 mile).

Remove the valve cap from the tyre valve stem. Press the tyre gauge firmly onto the valve to get a pressure measurement. If the cold tyre inflation pressure matches the recommended pressure on the tyre and loading information label, no further adjustment is necessary. If the pressure is low, add air until you reach the recommended amount.

If you overfill the tyre, release air by pushing on the metal stem in the centre of the tyre valve. Recheck the tyre pressure with the tyre gauge. Be sure to put the valve caps back on the valve stems. They help prevent leaks by keeping out dirt and moisture.

⚠ WARNING

- **Inspect your tyres frequently for proper inflation as well as wear and damage. Always use a tyre pressure gauge.**
- **Tyres with too much or too little pressure wear unevenly causing poor handling, loss of vehicle control, and sudden tyre failure leading to accidents, injuries, and even death. The recommended cold tyre pressure for your vehicle can be found in this manual and on the tyre label located on the driver's side centre pillar.**
- **Worn tyres can cause accidents. Replace tyres that are worn, show uneven wear, or are damaged.**
- **Remember to check the pressure of your spare tyre. Kia recommends that you check the spare every time you check the pressure of the other tyres on your vehicle.**

Tyre rotation

To equalize tread wear, it is recommended that the tyres be rotated every 10,000 km (6,500 miles) or sooner if irregular wear develops.

During rotation, check the tyres for correct balance.

When rotating tyres, check for uneven wear and damage. Abnormal wear is usually caused by incorrect tyre pressure, improper wheel alignment, out-of-balance wheels, severe braking or severe cornering. Look for bumps or bulges in the tread or side of tyre. Replace the tyre if you find either of these conditions. Replace the tyre if fabric or cord is visible. After rotation, be sure to bring the front and rear tyre pressures to specification and check lug nut tightness.

Refer to “Tyre and wheels” in chapter 9.

Without a spare tyre

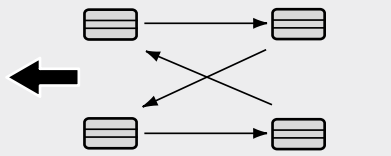

S2BLA790A

Directional tyres (if equipped)

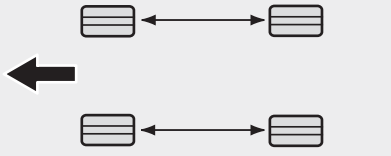

CBGQ0707A

Disc brake pads should be inspected for wear whenever tyres are rotated.

✻ NOTICE

Rotate radial tyres that have an asymmetric tread pattern only from front to rear and not from right to left.

⚠ WARNING

- **Do not use the compact spare tyre (if equipped) for tyre rotation.**
- **Do not mix bias ply and radial ply tyres under any circumstances. This may cause unusual handling characteristics that could result in death, severe injury, or property damage.**

Wheel alignment and tyre balance

The wheels on your vehicle were aligned and balanced carefully at the factory to give you the longest tyre life and best overall performance.

In most cases, you will not need to have your wheels aligned again. However, if you notice unusual tyre wear or your vehicle pulling one way or the other, the alignment may need to be reset.

If you notice your vehicle vibrating when driving on a smooth road, your wheels may need to be rebalanced.

⚠ CAUTION

Improper wheel weights can damage your vehicle's aluminum wheels. Use only approved wheel weights.

Tyre replacement



If the tyre is worn evenly, a tread wear Indicator (A) will appear as a solid band across the tread. This shows there is less than 1.6 mm (1/16 in.) of tread left on the tyre. Replace the tyre when this happens.

Do not wait for the band to appear across the entire tread before replacing the tyre.

✻ NOTICE

We recommend that when replacing tyres, use the same originally supplied with the vehicles.
If not, that affects driving performance.

⚠ CAUTION

When replacing the tyres, recheck and tighten the wheel nuts after driving about 50 km (31 miles) and recheck after driving about 1,000 km (620 miles). If the steering wheel shakes or the vehicle vibrates whilst driving, the tyre is out of balance. Align the tyre balance. If the problem is not solved, contact a professional workshop. Kia recommends to visit an authorised Kia dealer/service partner.

⚠ WARNING - Replacing tyres

To reduce the chance of serious or fatal injuries from an accident caused by tyre failure or loss of vehicle control:

- **Replace tyres that are worn, show uneven wear, or are damaged. Worn tyres can cause loss of braking effectiveness, steering control, and traction.**
- **Do not drive your vehicle with too little or too much pressure in your tyres. This can lead to uneven wear and tyre failure.**
- **When replacing tyres, never mix radial and bias-ply tyres on the same car. You must replace all tyres (including the spare) if moving from radial to bias-ply tyres.**
- **It is best to replace all four tyres at the same time. If that is not possible, or necessary, then replace the two front or two rear tyres as a pair.**

(Continued)

(Continued)

Replacing just one tyre can seriously affect your vehicle's handling.

- **Using tyres and wheels other than the recommended sizes could cause unusual handling characteristics and poor vehicle control, resulting in a serious accident.**
- **Wheels that do not meet Kia's specifications may fit poorly and result in damage to the vehicle or unusual handling and poor vehicle control.**
- **The ABS works by comparing the speed of the wheels. The tyre size affects wheel speed. When replacing tyres, all 4 tyres must use the same size originally supplied with the vehicle. Using tyres of a different size can cause the ABS (Anti-lock Brake System) and ESC (Electronic Stability Control) to work irregularly.**

Compact spare tyre replacement (if equipped)

A compact spare tyre has a shorter tread life than a regular size tyre. Replace it when you can see the tread wear indicator bars on the tyre. The replacement compact spare tyre should be the same size and design tyre as the one provided with your new vehicle and should be mounted on the same compact spare tyre wheel. The compact spare tyre is not designed to be mounted on a regular size wheel, and the compact spare tyre wheel is not designed for mounting a regular size tyre.

Wheel replacement

When replacing the metal wheels for any reason, make sure the new wheels are equivalent to the original factory units in diameter, rim width and offset.

⚠ WARNING

A wheel that is not the correct size may adversely affect wheel and bearing life, braking and stopping abilities, handling characteristics, ground clearance, body-to-tyre clearance, snow chain clearance, speedometer and odometer calibration, headlight aim and bumper height.

Tyre traction

Tyre traction can be reduced if you drive on worn tyres, tyres that are improperly inflated or on slippery road surfaces. Tyres should be replaced when tread wear indicators appear. Slow down whenever there is rain, snow or ice on the road to reduce the possibility of losing control of the vehicle.

Tyre maintenance

In addition to proper inflation, correct wheel alignment helps to decrease tyre wear. If you find a tyre is worn unevenly, have a professional workshop check the wheel alignment. Kia recommends to visit an authorised Kia dealer/service partner.

When you have new tyres installed, make sure they are balanced. This will increase vehicle ride comfort and tyre life. Additionally, a tyre should always be rebalanced if it is removed from the wheel.

Tyre sidewall labeling

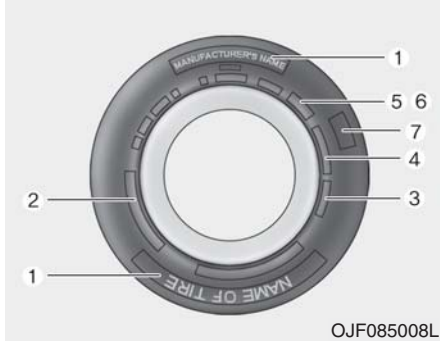

OJF085008L

This information identifies and describes the fundamental characteristics of the tyre and also provides the tyre identification number (TIN) for safety standard certification. The TIN can be used to identify the tyre in case of a recall.

1. Manufacturer or brand name

Manufacturer or Brand name is shown.

2. Tyre size designation

A tyre's sidewall is marked with a tyre size designation. You will need this information when selecting replacement tyres for your vehicle. The following explains what the letters and numbers in the tyre size designation mean.

Example tyre size designation:

(These numbers are provided as an example only; your tyre size designator could vary depending on your vehicle.)

P235/55R19 108T

P - Applicable vehicle type (tyres marked with the prefix "P" are intended for use on passenger vehicles or light trucks; however, not all tyres have this marking).

235 - Tyre width in millimeters.

55 - Aspect ratio. The tyre's section height as a percentage of its width.

R - Tyre construction code (Radial).

19 - Rim diameter in inches.

108 - Load Index, a numerical code associated with the maximum load the tyre can carry.

T - Speed Rating Symbol. See the speed rating chart in this section for additional information.

Wheel size designation

Wheels are also marked with important information that you need if you ever have to replace one. The following explains what the letters and numbers in the wheel size designation mean.

Example wheel size designation:

7.5JX19

7.5 - Rim width in inches.

J - Rim contour designation.

19 - Rim diameter in inches.

Tyre speed ratings

The chart below lists many of the different speed ratings currently being used for passenger car tyres. The speed rating is part of the tyre size designation on the sidewall of the tyre. This symbol corresponds to that tyre's designed maximum safe operating speed.

Speed Rating Symbol	Maximum Speed
S	180 km/h (112 mph)
T	190 km/h (118 mph)
H	210 km/h (130 mph)
V	240 km/h (149 mph)
W	270 km/h (168 mph)
Y	300 km/h (186 mph)

3. Checking tyre life (TIN : Tyre Identification Number)

Any tyres that are over 6 years old, based on the manufacturing date, (including the spare tyre) should be replaced by new ones. You can find the manufacturing date on the tyre sidewall (possibly on the inside of the wheel), displaying the DOT Code. The DOT Code is a series of numbers on a tyre consisting of numbers and English letters. The manufacturing date is designated by the last four digits (characters) of the DOT code.

DOT : XXXX XXXX OOOO

The front part of the DOT means a plant code number, tyre size and tread pattern and the last four numbers indicate week and year manufactured.

For example:

DOT XXXX XXXX 1619 represents that the tyre was produced in the 16th week of 2019.

⚠ WARNING - Tyre age

Tyres degrade over time, even when they are not being used.

Regardless of the remaining tread, we recommend that tyres be replaced after approximately six (6) years of normal service. Heat caused by hot climates or frequent high loading conditions can accelerate the aging process. Failure to follow this warning can result in sudden tyre failure, which could lead to a loss of control and an accident involving serious injury or death.

4. Tyre ply composition and material

The number of layers or plies of rubber-coated fabric in the tyre. Tyre manufacturers also must indicate the materials in the tyre, which include steel, nylon, polyester, and others. The letter "R" means radial ply construction; the letter "D" means diagonal or bias ply construction; and the letter "B" means belted-bias ply construction.

5. Maximum permissible inflation pressure

This number is the greatest amount of air pressure that should be put in the tyre. Do not exceed the maximum permissible inflation pressure. Refer to the Tyre and Loading Information label for recommended inflation pressure.

6. Maximum load rating

This number indicates the maximum load in kilograms and pounds that can be carried by the tyre. When replacing the tyres on the vehicle, always use a tyre that has the same load rating as the factory installed tyre.

7. Uniform tyre quality grading

Quality grades can be found where applicable on the tyre sidewall between tread shoulder and maximum section width.

For example:

TREADWEAR 200

TRACTION AA

TEMPERATURE A

Tread wear

The tread wear grade is a comparative rating based on the wear rate of the tyre when tested under controlled conditions on a specified government test course. For example, a tyre graded 150 would wear one-and-a-half times (1½) as well on the government course as a tyre graded 100.

The relative performance of tyres depends upon the actual conditions of their use, however, and may depart significantly from the norm due to variations in driving habits, service practices and differences in road characteristics and climate.

These grades are molded on the side-walls of passenger vehicle tyres. The tyres available as standard or optional equipment on your vehicle may vary with respect to grade.

Traction - AA, A, B & C

The traction grades, from highest to lowest, are AA, A, B and C. Those grades represent the tyre's ability to stop on wet pavement as measured under controlled conditions on specified government test surfaces of asphalt and concrete. A tyre marked C may have poor traction performance.

Temperature -A, B & C

The temperature grades are A (the highest), B, and C, representing the tyre's resistance to the generation of heat and its ability to dissipate heat when tested under controlled conditions on a specified indoor laboratory test wheel.

Sustained high temperature can cause the material of the tyre to degenerate and reduce tyre life, and excessive temperature can lead to sudden tyre failure. Grades B and A represent higher levels of performance on the laboratory test wheel than the minimum required by law.

⚠ WARNING

The traction grade assigned to this tyre is based on straight-ahead braking traction tests, and does not include acceleration, cornering, hydroplaning, or peak traction characteristics.

⚠ WARNING - Tyre temperature

The temperature grade for this tyre is established for a tyre that is properly inflated and not overloaded. Excessive speed, underinflation, or excessive loading, either separately or in combination, can cause heat build-up and possible sudden tyre failure. This can cause loss of vehicle control and serious injury or death.

Low aspect ratio tyre (if equipped)

Low aspect ratio tyres, whose aspect ratio is lower than 50, are provided for sporty looks.
Because the low aspect ratio tyres are optimized for handling and braking, it may be more uncomfortable to ride in and there is more noise compare with normal tyres.

⚠ CAUTION

Because the sidewall of the low aspect ratio tyre is shorter than the normal, the wheel and tyre of the low aspect ratio tyre is easier to be damaged. So, follow the instructions below.

- ***When driving on a rough road or off road, drive cautiously because tyres and wheels may be damaged. And after driving, inspect tyres and wheels.***
- ***When passing over a pothole, speed bump, manhole, or kerb stone, drive slowly so that the tyres and wheels are not damaged.***
- ***If the tyre is impacted, inspect the tyre condition or contact a professional workshop. Kia recommends to visit an authorised Kia dealer/service partner.***
- ***To prevent damage to the tyre, inspect the tyre condition and pressure every 3,000 km.***

⚠ CAUTION

- ***It is not easy to recognize the tyre damage with your own eyes. But if there is the slightest hint of tyre damage, even though you cannot see the tyre damage with your own eyes, have the tyre checked or replaced because the tyre damage may cause air leakage from the tyre.***
- ***If the tyre is damaged by driving on a rough road, off road, pothole, manhole, or kerb stone, it will not be covered by the warranty.***
- ***You can find out the tyre information on the tyre sidewall.***

FUSES

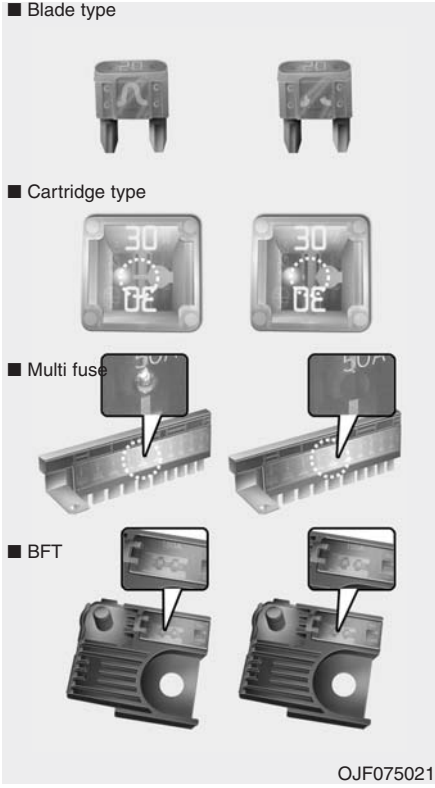

❈ Left side : Normal
Right side : Blown

A vehicle's electrical system is protected from electrical overload damage by fuses.

This vehicle has 2 (or 3) fuse panels, one located in the driver's side panel bolster, the others in the engine compartment near the battery.

If any of your vehicle's lights, accessories, or controls do not work, check the appropriate circuit fuse. If a fuse has blown, the element inside the fuse would be melted.

If the electrical system does not work, first check the driver's side fuse panel.

Before replacing a blown fuse, disconnect the negative battery cable.

Always replace a blown fuse with one of the same rating.

If the replacement fuse blows, this indicates an electrical problem. Avoid using the system involved and immediately consult a professional workshop. Kia recommends to consult an authorised Kia dealer/service partner.

Three kinds of fuses are used: blade type for lower amperage rating, cartridge type, and multi fuse for higher amperage ratings.

⚠ WARNING - Fuse replacement

- **Never replace a fuse with anything but another fuse of the same rating.**
- **A higher capacity fuse could cause damage and possibly a fire.**
- **Never install a wire or aluminum foil instead of the proper fuse even as a temporary repair. It may cause extensive wiring damage and a possible fire.**
- **Do not arbitrarily modify or add-on electric wiring of the vehicle.**

⚠ CAUTION

Do not use a screwdriver or any other metal object to remove fuses because it may cause a short circuit and damage the system.

✻ NOTICE

- **When replacing fuse, turn the ignition "OFF" and turn off switches of all electrical devices then remove battery (-) terminal.**
- **The actual fuse/relay panel label may differ from equipped items.**

⚠ CAUTION

- ***When replacing a blown fuse or relay with a new one, make sure the new fuse or relay fits tightly into the clips. The incomplete fastening fuse or relay may cause the vehicle wiring and electric systems damage and a possible fire.***
- ***Do not remove fuses, relays and terminals fastened with bolts or nuts. The fuses, relays and terminals may be fastened incompletely, and it may cause a possible fire. If fuses, relays and terminals fastened with bolts or nuts are blown, consult a professional workshop. Kia recommends to consult an authorised Kia dealer/service partner.***
- ***Do not input any other objects except fuses or relays into fuse/relay terminals such as a driver or wiring. It may cause contact failure and system malfunction.***

(Continued)

⚠ CAUTION

(Continued)

- ***Do not plug in screwdrivers or aftermarket wiring into the terminal originally designed for fuse and relays only. The electrical system and wiring of the vehicle interior may be damaged or burned due to contact failure.***
- ***If you directly connect the wire on the taillight or replace the bulb which is over the regulated capacity to install trailers etc., the inner junction block can get burned.***

⚠ CAUTION

Visually inspect the battery cap to ensure it is securely closed. If the battery cap is not securely closed, moisture may enter the system and damage the electrical components.

✻ NOTICE - Random wiring prohibited when retrofitting equipment

Use of random wiring in the vehicle might cause danger due to failure and damage of the vehicle's performance.
Using random wires especially when retrofitting AVN or theft alarm system, remote engine control, car phone or radio might damage the vehicle or cause fire.

✻ NOTICE - Remodeling Prohibited

Do not try remodeling the vehicle in any way. It is illegal, and may affect the vehicle's performance, durability, and safety. Warranty is also not provided for problems caused by remodeling.
Be aware of safety problems caused by remodeling the vehicle with unauthorised electrical devices(lamp, black box, electrical equipment, diagnostic device, communication device, etc.). It might cause malfunction of the vehicle, wiring damage, battery discharge, connector damage, or fire. the vehicle or cause fire.

✻ NOTICE - Window tinting precaution

Window tint(especially metallic film) might cause communication disorder or poor radio reception, and malfunction of the automatic lighting system due to excessive change of illumination inside the vehicle. The solution used might also flow into electric, electronic devices causing disorder and failure.

Inner panel fuse replacement


OJA077026R

1. Turn the ignition switch and all other switches off.
2. Open the fuse panel cover.

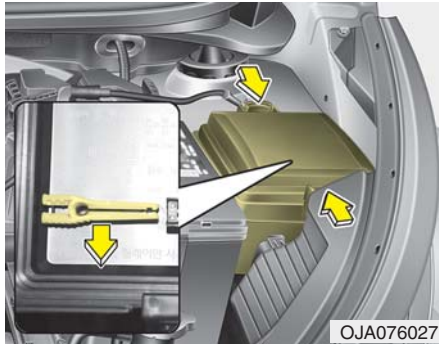
OJA076027

3. Pull the suspected fuse straight out. Use the removal tool provided in the main fuse box in the engine compartment.
4. Check the removed fuse; replace it if it is blown.

   Spare fuses are provided in the instrument panel fuse panel (or in the engine compartment fuse panel).
5. Push in a new fuse of the same rating, and make sure it fits tightly in the clips.

If it fits loosely, consult a professional workshop. Kia recommends to consult an authorised Kia dealer/service partner.

If you do not have a spare, use a fuse of the same rating from a circuit you may not need for operating the vehicle, such as the cigarette lighter fuse.

If the headlights or taillights, stoplights, courtesy lamp, day time running lights (D.R.L) do not work and the fuses are OK, check the fuse panel in the engine compartment. If a fuse is blown, it must be replaced.

Memory fuse

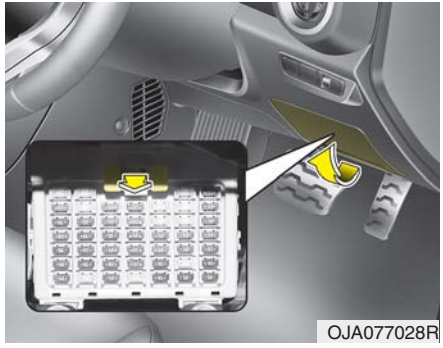
OJA077028R

Your vehicle is equipped with a memory fuse to prevent battery discharge if your vehicle is parked without being operated for prolonged periods. Use the following procedures before parking the vehicle for prolonged periods.

1. Turn off the engine.
2. Turn off the headlights and tail lights.
3. Open the driver's side panel cover and pull up the memory fuse.

✻ NOTICE

- **If the memory fuse is pulled up from the fuse panel, the warning chime, audio, clock and interior lamps, etc., will not operate. Some items must be reset after replacement. Refer to "Battery" in this section.**
- **Even when the memory fuse is pulled up, the battery can still be discharged by operation of the headlights or other electrical devices.**

Engine compartment fuse replacement

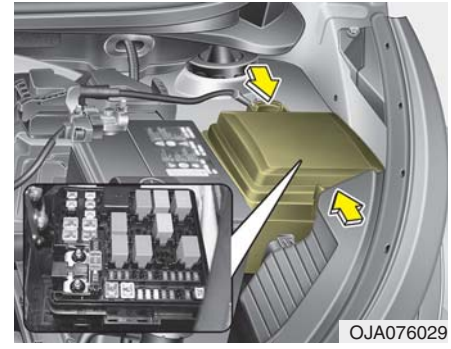
OJA076029

1. Turn the ignition switch and all other switches off.
2. Remove the fuse panel cover by pressing the tab and pulling the cover up. When the blade type fuse is disconnected, remove it by using the clip designed for changing fuses located in the engine room fuse box. Upon removal, securely insert reserve fuse of equal quantity.

3. Check the removed fuse; replace it if it is blown. To remove or insert the fuse, use the fuse puller in the engine compartment fuse panel.
4. Push in a new fuse of the same rating, and make sure it fits tightly in the clips. If it fits loosely, consult a professional workshop. Kia recommends to consult an authorised Kia dealer/service partner.

⚠ CAUTION

After checking the fuse panel in the engine compartment, securely install the fuse panel cover through the audible clicking sound.

If not, electrical failures may occur from water contact.

Multi fuse

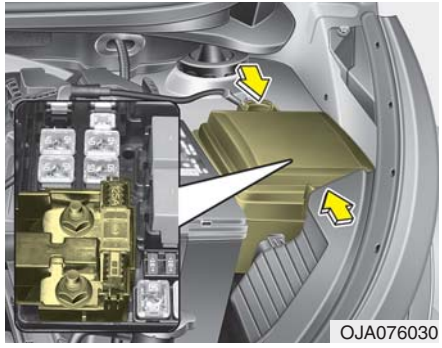

✻ NOTICE

If the multi fuse is blown, consult a professional workshop. Kia recommends to consult an authorised Kia dealer/service partner.

⚠ CAUTION

Do not remove fuses, relays and terminals fastened with bolts or nuts. The fuses, relays and terminals may be fastened incompletely, and it may cause a possible fire. If fuses, relays and terminals fastened with bolts or nuts are blown, consult a professional workshop. Kia recommends to consult an authorised Kia dealer/service partner.

Fuse/relay panel description

■ Driver's side fuse panel

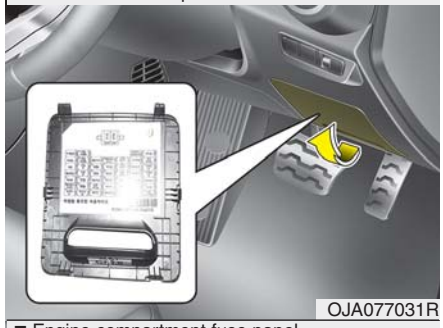

OJA077031R

■ Engine compartment fuse panel

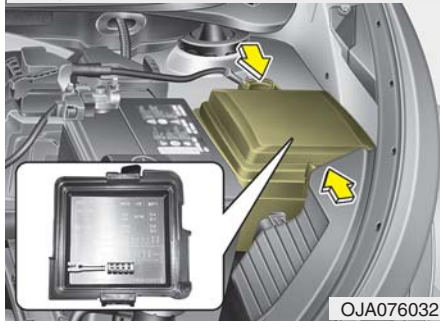

OJA076032

Inside the fuse/relay panel covers, you can find the fuse/relay label describing fuse/relay name and capacity.

✻ NOTICE

Not all fuse panel descriptions in this manual may be applicable to your vehicle. It is accurate at the time of printing. When you inspect the fuse panel in your vehicle, refer to the fuse panel label.

Driver's side fuse panel

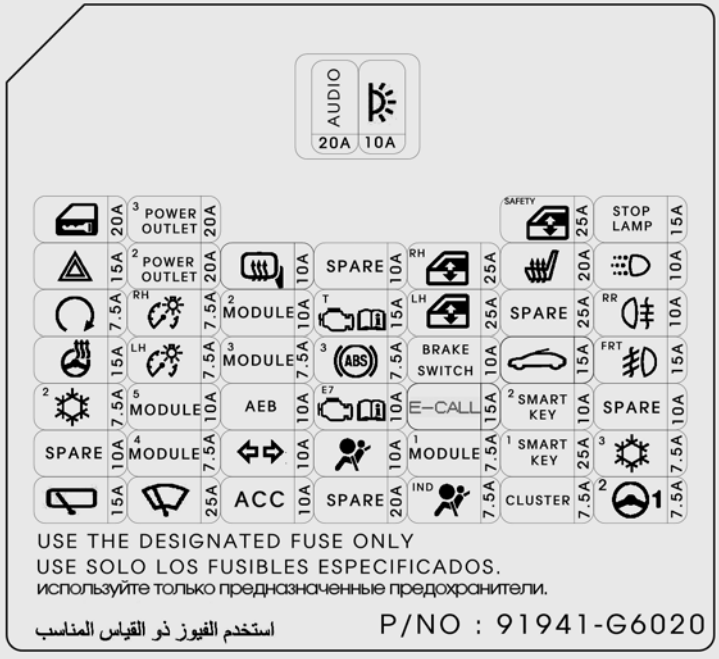

OJA077033L

Instrument panel (Driver's side fuse panel)

Symbol	Fuse rating	Circuit Protected
AUDIO	20A	Audio, Audio/Video & Navigation Head Unit, Low DC-DC Convertor, E-Call Module
	10A	Instrument Cluster, BCM (Body Control Module)/SLM(Seat Belt & Lighting Module), Air Conditioner Control Module, MUT(Multi Unit Test), Driver Vanity Lamp, Luggage Lamp, Room Lamp/Overhead Console Lamp, Power Outside Mirror Switch
	20A	Driver Door Lock Latch, Tail Gate Unlock Relay, Door Lock/Unlock Relay
3 POWER OUTLET	20A	Power Outlet
	25A	Driver Safety Power Window Module
STOP LAMP	15A	SSEM (Stop Signal Electronic Module) (Intelligent Power Switch Control Module)
	15A	BCM (Body Control Module), Hazard Switch
2 POWER OUTLET	20A	Cigarette Lighter
	10A	Outside Mirror Heater, ECM (Engine Control Module)/PCM (Power train Control Module), Air Conditioner Control Module
SPARE	15A	-
	25A	Power Window Main Switch, Passenger Power Window Motor

Symbol	Fuse rating	Circuit Protected
	20A	Driver/Passenger Seat Control Module
	10A	DRL (Daytime Running Light) Relay
	7.5A	[Without Keyless Entry] Clutch Switch, ECM (Engine Control Module), Smart Key Control Module, Engine Room Junction Block (Start Relay) , [With Keyless Entry] Buglar Alarm Relay
RH 	7.5A	Head Lamp Right Handle side, Rear Combination Lamp Right Handle side, Illumination(+)
2 MODULE	10A	Console Switch, Driver/Passenger Seat Console Module, ETCS(Electronic Toll Collection System)
T 	15A	Engine Room Junction Block (Back-Up Lamp Switch), Stop Lamp Switch, Vacuum Pressure Switch, Vehicle Speed Sensor
LH 	25A	Power Window Main Switch, Passenger Power Window Motor
SPARE	25A	-
RR 	10A	Rear Fog Lamp, Instrument Cluster
	15A	Clock Spring (Remote Control Switch)
LH 	7.5A	Head Lamp Left Handle side, Rear Combination Lamp Left Handle side
3 MODULE	7.5A	BCM (Body Control Module), Crash Pad Switch, Head Lamp Levelling Device Actuator Left Handle side/Right Handle side
3 	7.5A	ABS (Anti-lock brake system)/ESC (Electronic Stability Control) Control Module, Diagnosis

Symbol	Fuse rating	Circuit Protected
BRAKE SWITCH	10A	Stop Lamp Switch, Smart Key Control Module
	15A	Sunroof Motor
FRT	15A	Front Fog Lamp, Instrument Cluster
2 	7.5A	Air Conditioner Control Module, Dual Pressure Switch, Engine Room Junction Block (Blower Relay)
5 MODULE	10A	Engine Room Junction Block (Head Lamp Low Relay, Head Lamp High Relay), Nozzle Heater, Driver/Passenger Seat Control Module
AEB	10A	AEB (Autonomous Emergency Braking) Control Module
E7 	10A	PCM (Power train Control Module)/ECM (Engine Control Module), Smart Key Control Module/Immobiliser Module
E-CALL	15A	-
2 SMART KEY	10A	Immobiliser Module
SPARE	10A	-
SPARE	10A	-
4 MODULE	7.5A	BCM (Body Control Module)/SLM(Seat Belt & Lighting Module), Smart Key Control Module

Symbol	Fuse rating	Circuit Protected
	10A	Hazard Switch
	10A	ACU(Airbag Control Unit)
1 MODULE	7.5A	BCM (Body Control Module)/SLM(Seat Belt & Lighting Module), Rear Seat Belt Reminder Unit
1 SMART KEY	25A	Smart Key Control Module
	7.5A	Air Conditioner Control Module, Blower Motor
	15A	Multifunction Switch (Wiper)
	25A	Multifunction Switch (Wiper), Front Wiper Motor
ACC	10A	BCM (Body Control Module)/SLM(Seat Belt & Lighting Module), MTS (Mozen Telematics System) E-Call Module, Audio, Low DC-DC Convertor, Audio/Video & Navigation Head Unit, Smart Key Control Module, Power Outside Mirror Switch
SPARE	20A	-
	7.5A	Instrument Cluster, Air Conditioner Control Module
CLUSTER	7.5A	Instrument Cluster
	7.5A	MDPS (Motor Driven Power Steering) Unit

Engine compartment fuse panel

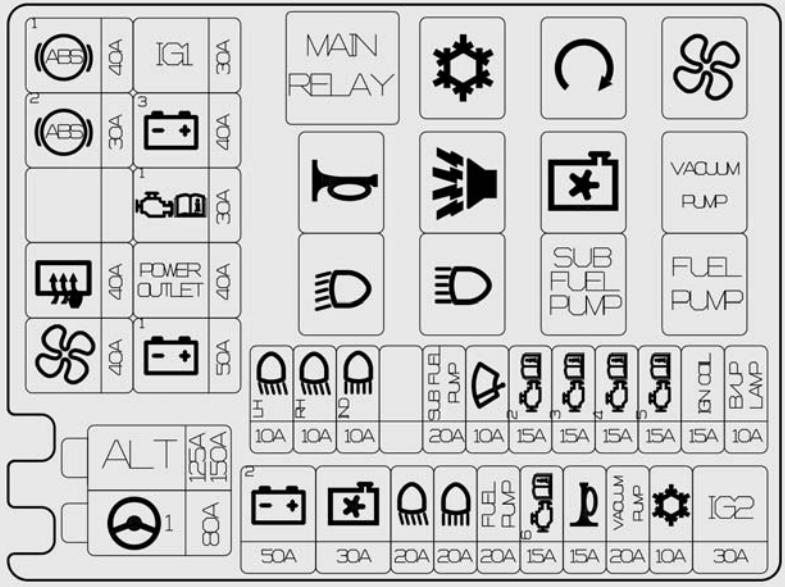

OJA076034

Engine room compartment fuse panel (Kappa 1.0L/1.2L MPI Engine (Petrol))

Symbol	Fuse rating	Circuit Protected
ALT	125A (Without ISG) 150A (With ISG)	Fuse(ABS1, ABS2, RR DEFOG, POWER OUTLET, BLOWER), Alternator
	80A	MDPS (Motor Driven Power Steering) Module
	40A	ABS (Anti-lock brake system)/ESC (Electronic Stability Control) Control Module, Multipurpose Check Connector
IG1	30A	[With Smart Key] PDM Relay Box (IG1 Relay, ACC Relay) [Without Smart Key] Ignition Switch
	30A	ABS (Anti-lock brake system)/ESC (Electronic Stability Control) Control Module
	40A	Instrument Panel Junction Block (Tail Lamp Relay), Instrument Panel Junction Block Fuse(Door Lock, Hazard)
	30A	Main Relay
	40A	Instrument Panel Junction Block (Rear Defogger Relay)
POWER OUTLET	40A	Instrument Panel Junction Block (Power Outlet Relay)
	40A	Blower Relay
	50A	Instrument Panel Junction Block (Power Window Relay), Instrument Panel Junction Block Fuse(Sunroof, Seat Heater, Smart Key1, Smart Key 2, Brake Switch, Safety Power Window)
	10A	Head Lamp Left Handle side, Instrument Cluster
	10A	Head Lamp Right Handle side

Symbol	Fuse rating	Circuit Protected
IND	10A	Head Lamp High Relay, Head Lamp Left Handle side/Right Handle side, Instrument Cluster
	10A	Multifunction Switch, Front Wiper Motor
3	15A	ECM (Engine Control Module)/PCM (Power train Control Module), Purge Control Solenoid Valve(M/T), Oil Control Valve #1/#2 (IN/EX)(M/T), Air Conditioner Compressor
4	15A	Cooling Stop Valve, Oxygen Sensor (Up/Down), Front Wheel Sensor Right Handle side, Canister Close Valve
5	15A	ECM (Engine Control Module)/PCM (Power train Control Module), Injector #1/#2/#3/#4, Fuel Pump Relay, Purge Control Solenoid Valve(A/T), Oil Control Valve #1/#2 (IN/EX)(A/T)
IGN COIL	15A	Ignition Coil #1/#2/#3, Ignition Coil #4 (1.2L MPI Engine), Condenser (1.2L MPI Engine)
B/UP LAMP	10A	Back-Up Lamp Switch, Back-Up Lamp
2	50A	Fuse (ALT, MDPS, B+3, H/LP LH, ECU3, H/LP LOW), Instrument Panel Junction Block Fuse(Front Fog Lamp, Rear Fog Lamp, Audio, Room Lamp, DRL, Stop Lamp)
	30A	Cooling Fan Relay
	20A	Head Lamp Low Relay
	20A	Head Lamp High Relay
FUEL PUMP	20A	Fuel Pump Relay
6	15A	ECM (Engine Control Module)/PCM (Power train Control Module)

Symbol	Fuse rating	Circuit Protected
	15A	Horn Relay, Burglar Alarm Horn Relay
VACUUM PUMP	20A	Vacuum Lamp Relay
	10A	Air Conditioner Relay
IG2	30A	Start Relay, PDM Relay Box (IG2 Relay), Ignition Switch

Relay (Kappa 1.0L/1.2L MPI Engine (Petrol))

Symbol	Relay Name	Type
MAIN RELAY	Main Relay	MINI
	Air Conditioner Relay	MICRO
	Start Relay	HIGH CURRENT MICRO
	Blower Relay	HIGH CURRENT MICRO
	Horn Relay	MICRO
	Burglar Alarm Horn Relay	MICRO
	Cooling Fan Relay	HIGH CURRENT MICRO
VACUUM PUMP	Vacuum Lamp Relay	MICRO
	Head Lamp Low Relay	HIGH CURRENT MICRO
	Head Lamp High Relay	MICRO
FUEL PUMP	Fuel Pump Relay	MICRO

Engine room compartment fuse panel (Kappa 1.0L MPI Engine (FFV))

Symbol	Fuse rating	Circuit Protected
ALT	125A (Without ISG) 150A (With ISG)	Fuse(ABS1, ABS2, RR DEFOG, POWER OUTLET, BLOWER), Alternator
1	80A	MDPS (Motor Driven Power Steering) Module
1 ABS	40A	ABS (Anti-lock brake system)/ESC (Electronic Stability Control) Control Module, Multipurpose Check Connector
IG1	30A	[With Smart Key] PDM Relay Box (IG1 Relay, ACC Relay) [Without Smart Key] Ignition Switch
2 ABS	30A	ABS (Anti-lock brake system)/ESC (Electronic Stability Control) Control Module
3	40A	FUSE(SUB FEUL PUMP), Instrument Panel Junction Block (Tail Lamp Relay), Instrument Panel Junction Block Fuse(Door Lock, Hazard)
1	30A	Main Relay
	40A	Instrument Panel Junction Block (Rear Defogger Relay)
POWER OUTLET	40A	Instrument Panel Junction Block (Power Outlet Relay)
	40A	Blower Relay
1	50A	Instrument Panel Junction Block (Power Window Relay), Instrument Panel Junction Block Fuse(Sunroof, Seat Heater, Smart Key1, Smart Key 2, Brake Switch, Safety Power Window)
LH	10A	Head Lamp Left Handle side, Instrument Cluster
RH	10A	Head Lamp Right Handle side

Symbol	Fuse rating	Circuit Protected
IND	10A	Head Lamp High Relay, Head Lamp Left Handle side/Right Handle side, Instrument Cluster
SUB FUEL PUMP	20A	Sub Fuel Pump Relay
	10A	Multifunction Switch, Front Wiper Motor
3	15A	[M/T] ECM (Engine Control Module), Purge Control Solenoid Valve(M/T), Oil Control Valve (IN)(M/T), Oxygen Sensor (Up/Down), Air Conditioner Relay, Fuel Pump Relay, Camshaft Position Sensor #1 (IN) [A/T] Cooling Fan Relay, PCM (Power train Control Module)
4	15A	[M/T] Cooling Fan Relay, PCM, Purge Control Solenoid Valve(M/T), Oil Control Valve (IN)(M/T), Oxygen Sensor (Up/Down) [A/T] Air Conditioner Relay, Fuel Pump Relay, Camshaft Position Sensor #1 (IN)
5	15A	ECM (Engine Control Module)/PCM (Power train Control Module), Injector #1/#2/#3, Sub Fuel Pump Relay
IGN COIL	15A	Ignition Coil #1/#2/#3, Condenser
B/UP LAMP	10A	Back-Up Lamp Switch, Back-Up Lamp
2	50A	Fuse (ALT, MDPS, B+3, H/LP LH, ECU3, H/LP LOW), Instrument Panel Junction Block Fuse(Front Fog Lamp, Rear Fog Lamp, Audio, Room Lamp, DRL, Stop Lamp)
	30A	Cooling Fan Relay
	20A	Head Lamp Low Relay
	20A	Head Lamp High Relay

Symbol	Fuse rating	Circuit Protected
FUEL PUMP	20A	Fuel Pump Relay
6 	15A	ECM (Engine Control Module)/PCM (Power train Control Module)
	15A	Horn Relay, Burglar Alarm Horn Relay
VACUUM PUMP	20A	Vacuum Lamp Relay
	10A	Air Conditioner Relay
IG2	30A	Start Relay, PDM Relay Box (IG2 Relay), Ignition Switch

Relay (Kappa 1.0L MPI Engine (FFV))

Symbol	Relay Name	Type
MAIN RELAY	Main Relay	MINI
	Air Conditioner Relay	MICRO
	Start Relay	HIGH CURRENT MICRO
	Blower Relay	HIGH CURRENT MICRO
	Horn Relay	MICRO
	Burglar Alarm Horn Relay	MICRO
	Cooling Fan Relay	HIGH CURRENT MICRO
	Head Lamp Low Relay	HIGH CURRENT MICRO
	Head Lamp High Relay	MICRO
SUB FUEL PUMP	Sub Fuel Pump Relay	MICRO
FUEL PUMP	Fuel Pump Relay	MICRO

LIGHT BULBS

Bulb replacement precaution

Please prepare bulbs with appropriate standards in case of emergencies. Refer to “Bulb Wattage” in chapter 9.

When changing bulbs and sorts, first turn off the engine at a safe place, firmly apply the side brake and take out the battery's negative (-) terminal.

⚠ WARNING - Working on the lights

Prior to working on the light, firmly apply the parking brake, ensure that the ignition switch is turned to the LOCK position and turn off the lights to avoid sudden movement of the vehicle and burning your fingers or receiving an electric shock.

Use only the bulbs of the specified wattage.

⚠ WARNING

Be sure to replace the burned-out bulb with one of the same wattage rating. Otherwise, it may cause extensive wiring damage and possible fire.

⚠ CAUTION

If you don’t have necessary tools, the correct bulbs and the expertise, consult a professional workshop. Kia recommends to consult an authorised Kia dealer/service partner.

In many cases, it is difficult to replace vehicle light bulbs because other parts of the vehicle must be removed before you can get to the bulb. This is especially true if you have to remove the headlight assembly to get to the bulb(s). Removing/ installing the headlight assembly can result in damage to the vehicle.

⚠ CAUTION

- ***If unauthentic parts or substandard lights are used when changing lights, it may lead to fuse disconnection and malfunction, and other wiring damages.***
- ***Do not install extra lamps or LED to the vehicle. If supplementary lights are installed, it may lead to lamp malfunction and flickering of the lights. In addition, the fuse box and other writing may be damaged.***

• Lamp part malfunction due to net-work failure

The headlamp, taillight, and fog light may lit up when the head lamp switch is turned ON, and not light up when the taillight or for light switch is turned ON. This may be cause by network failure or vehicle electrical control system malfunction. If there is a problem, have the system serviced by a professional workshop. Kia recommends to visit an authorised Kia dealer/service partner.

• Lamp part malfunction due to electrical control system stabilization

A normally functioning lamp may flicker momentarily. This momentary occurrence is due to stabilization function of the vehicle's electrical control system. If the lamp soon returns to normal, the vehicle does not require service.

However, if the lamp goes out after the momentary flickering, or the flickering continues, have the system serviced by a professional workshop. Kia recommends to visit an authorised Kia dealer/service partner.

✻ NOTICE

- **If the light bulb or lamp connector is removed from an operating lamp activated by electricity, the fuse box's electronic device may scan it as a malfunction. Therefore, a lamp malfunction history may be recorded in Diagnostic Trouble Code (DTC) in the fuse box.**
- **It is normal for an operating lamp may blink temporarily. Since this occurrence is due stabilization function of the vehicle's electronic control device, if the lamp lights up normally after temporary blinking, there is no problem in the vehicle. However, if the lamp continues to blink several times or turn off completely, there may be an error in the vehicle's electronic control device. In this case, have the vehicle checked by a professional workshop immediately. Kia recommends to visit an authorised Kia dealer/service partner.**

✻ NOTICE

Have the headlight aiming adjusted after an accident or after the headlight assembly is reinstalled by a professional workshop. Kia recommends to visit an authorised Kia dealer/service partner.

✻ NOTICE

After driving in heavy rain or washing, headlamp and taillamp lenses could appear frosty. This condition is caused by the temperature difference between the lamp inside and outside. This is similar to the condensation on your windows inside your vehicle during the rain and doesn't indicate a problem with your vehicle. If the water leaks into the lamp bulb circuitry, have the vehicle checked by a professional workshop. Kia recommends to visit an authorised Kia dealer/service partner.

Light bulb position (Front)

■ Head lamp - Type A



OJA076035

■ Head lamp - Type B

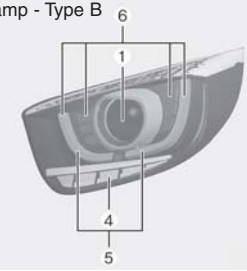

OJA076036

(1) Headlamp (Low/High)
(2) Front turn signal lamp
(3) Position lamp
(4) Front turn signal lamp (LED type)
(5) Position lamp (LED type)
(6) Day time running lamp (LED type)

■ Front fog lamp - Type A



OJA076037

■ Front fog lamp - Type B

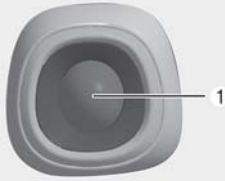

OJA076038

■ Front fog lamp - Type C



OJA076039

■ Day time running lamp - Type A



OJA076040

■ Day time running lamp - Type B



OJA076041

■ Day time running lamp - Type C



OJA076042

(1) Front fog lamp
(2) Day time running lamp (bulb type)

Light bulb position (Rear)

■ Rear combination lamp – Type A

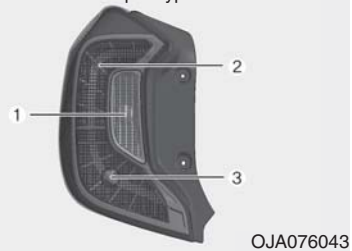

OJA076043

■ Rear combination lamp – Type B

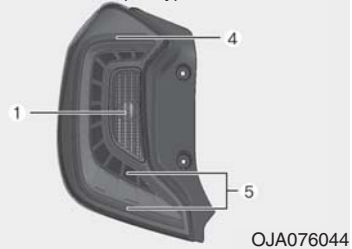

OJA076044

(1) Rear turn signal lamp (Bulb type)
(2) Tail lamp (BULB type)
(3) Stop and tail lamp (BULB type)
(4) Tail lamp (LED type)
(5) Stop and tail lamp (LED type)

■ Back up lamp - Type A



OJA076045

■ Back up lamp - Type B



OJA076046

■ Back up lamp - Type C



OJA076047

■ Rear fog lamp - Type A



OJA076048

■ Rear fog lamp - Type B



OJA076049

■ Rear fog lamp - Type C



OJA076050

(1) Back up lamp (Bulb type)
(2) Rear fog lamp (BULB type)

Light bulb position (Side)

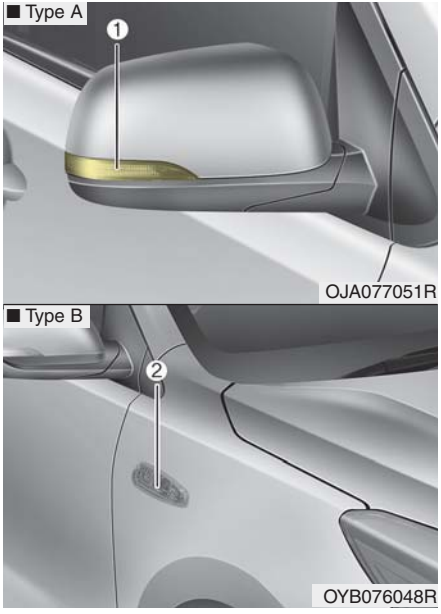

(1) Side repeater lamp (LED type)
(2) Side repeater lamp (bulb type)

Headlamp (Low/High beam) bulb replacement (Headlamp Type A)

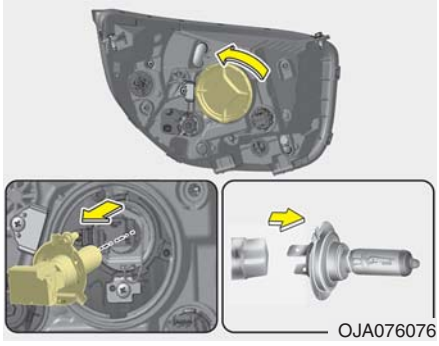

1. Open the bonnet.
2. Remove the headlamp bulb cover by turning it counterclockwise.
3. Disconnect the headlamp bulb socket-connector.
4. Unsnap the headlamp bulb retaining wire by pressing the end and pushing it upward.
5. Remove the bulb from the head lamp assembly.
6. Install a new headlamp bulb and snap the headlamp bulb retaining wire into position by aligning the wire with the groove on the bulb.
7. Connect the headlamp bulb socket-connector.
8. Install the headlamp bulb cover by turning it clockwise.

Headlamp bulb


OHD076046

⚠ WARNING - Halogen bulbs

- **Halogen bulbs contain pressurized gas that will produce flying pieces of glass if broken.**

(Continued)

(Continued)

- **Always handle them carefully, and avoid scratches and abrasions. If the bulbs are lit, avoid contact with liquids. Never touch the glass with bare hands. Residual oil may cause the bulb to overheat and burst when lit.**

  A bulb should be operated only when installed in a headlight.
- **If a bulb becomes damaged or cracked, replace it immediately and carefully dispose of it.**
- **Wear eye protection when changing a bulb. Allow the bulb to cool down before handling it.**

Position lamp bulb replacement (Headlamp Type A)

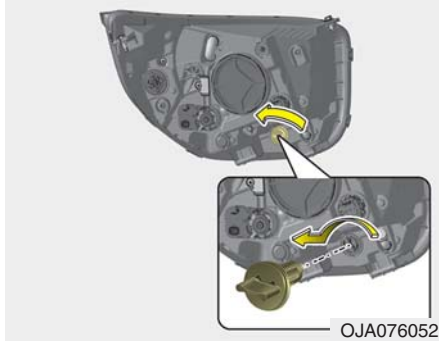
OJA076052

1. Open the bonnet.
2. Remove the bulb-socket from the headlamp assembly by turning the bulb-socket counterclockwise until the tabs on the bulb-socket align with the slots on the headlamp assembly.
3. Remove the bulb from bulb-socket by pulling it out.
4. Insert a new bulb by inserting it into the bulb-socket.

5. Install the socket in the headlamp assembly by aligning the tabs on the bulb-socket with the slots in the assembly. Push the bulb-socket into the headlamp assembly and turn the socket clockwise.

Front turn signal lamp bulb replacement (Headlamp Type A)

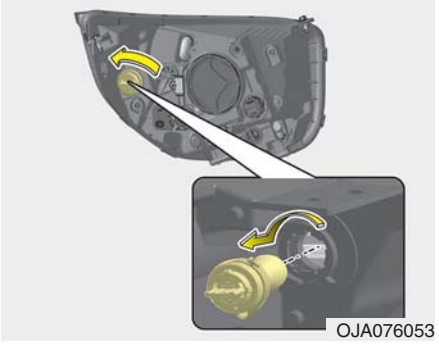
OJA076053

1. Open the bonnet.
2. Remove the bulb-socket from the headlamp assembly by turning the bulb-socket counterclockwise until the tabs on the bulb-socket align with the slots on the headlamp assembly.
3. Remove the bulb from the bulb-socket by pressing it in and rotating it counterclockwise until the tabs on the bulb align with the slots in the bulb-socket. Pull the bulb out of the bulb-socket
4. Insert a new bulb by inserting it into the bulb-socket and rotating it until it locks into place.
5. Install the socket in the headlamp assembly by aligning the tabs on the bulb-socket with the slots in the assembly. Push the bulb-socket into the headlamp assembly and turn the socket clockwise.

Headlamp (Low/High beam) bulb replacement (Headlamp Type B)

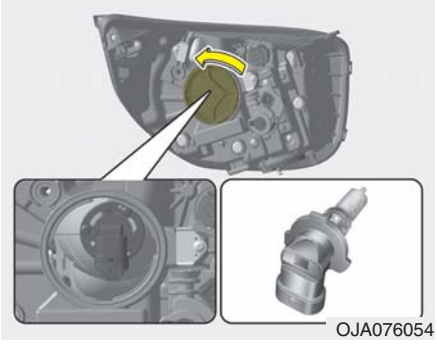
OJA076054

1. Open the bonnet.
2. Remove the headlamp bulb cover by turning it counterclockwise.
3. Disconnect the headlamp bulb socket-connector.
4. Remove the bulb-socket from the headlamp assembly by turning the bulb-socket counterclockwise until the tabs on the bulb-socket align with the slots on the headlamp assembly.
5. Install a new bulb-socket assembly in the headlamp assembly by aligning the tabs on the bulb-socket with the slots in the headlamp assembly. Push the bulb-socket into the headlamp assembly and turn the bulb-socket clockwise.
6. Install the headlamp bulb cover by turning it clockwise.

Headlamp bulb


OQL075058

⚠ WARNING - Halogen bulbs

- **Halogen bulbs contain pressurized gas that will produce flying pieces of glass if broken.**

(Continued)

(Continued)

- **Always handle them carefully, and avoid scratches and abrasions. If the bulbs are lit, avoid contact with liquids. Never touch the glass with bare hands. Residual oil may cause the bulb to overheat and burst when lit.**

  A bulb should be operated only when installed in a headlight.
- **If a bulb becomes damaged or cracked, replace it immediately and carefully dispose of it.**
- **Wear eye protection when changing a bulb. Allow the bulb to cool down before handling it.**

Front turn signal lamp bulb (LED type) replacement

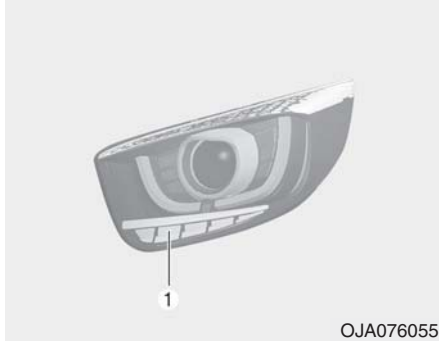

OJA076055

If the turn signal lamp bulb (LED type) (1) does not operate, have your vehicle checked by a professional workshop. Kia recommends to visit an authorised Kia dealer/service partner.

Front fog lamp bulb replacement

■ Front fog lamp - Type A



OJA076037

■ Front fog lamp - Type B

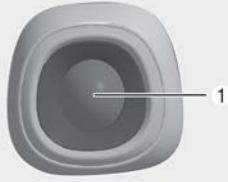

OJA076038

■ Front fog lamp - Type C



OJA076039

If the front fog lamp (1) does not operate, have your vehicle checked by a professional workshop. Kia recommends to visit an authorised Kia dealer/service partner.

Position lamp + DRL (LED type) bulb replacement

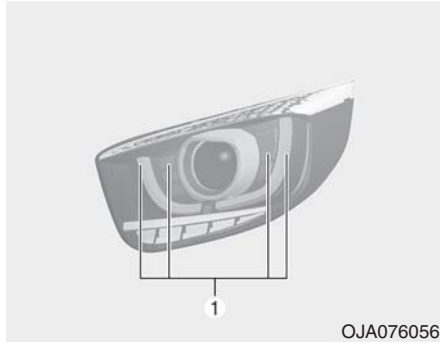

If the position lamp + DRL (1) does not operate, have your vehicle checked by a professional workshop. Kia recommends to visit an authorised Kia dealer/service partner.

DRL (Bulb type) bulb replacement

■ Day time running lamp - Type A



■ Day time running lamp - Type B



■ Day time running lamp - Type C



If the DRL (2) does not operate, have your vehicle checked by a professional workshop. Kia recommends to visit an authorised Kia dealer/service partner.

Side repeater lamp (LED type) bulb Replacement

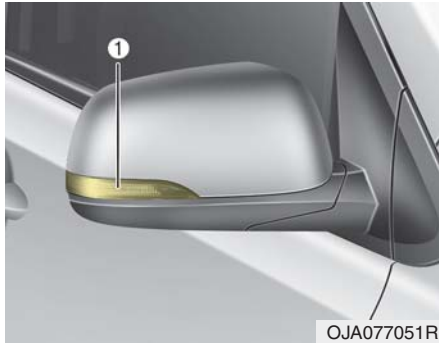

If the Side repeater lamp (1) does not operate, have your vehicle checked by a professional workshop. Kia recommends to visit an authorised Kia dealer/service partner.

Side repeater lamp (bulb type) bulb Replacement

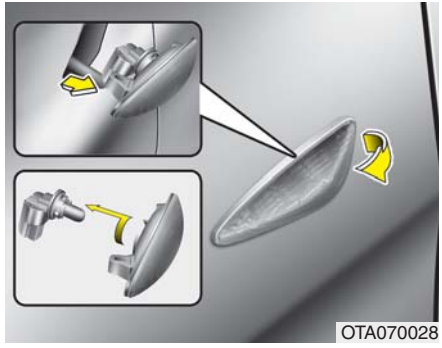

1. Remove the lamp assembly from the vehicle by prying the lens and pulling the assembly out.
2. Disconnect the bulb electrical connector.
3. Separate the socket and the lens parts by turning the socket counterclockwise until the tabs on the socket align with the slots on the lens part.

4. Remove the bulb by pulling it straight out.
5. Insert a new bulb in the socket.
6. Reassemble the socket and the lens part.
7. Connect the bulb electrical connector.
8. Reinstall the lamp assembly to the body of the vehicle.

Stop and tail lamp bulb replacement

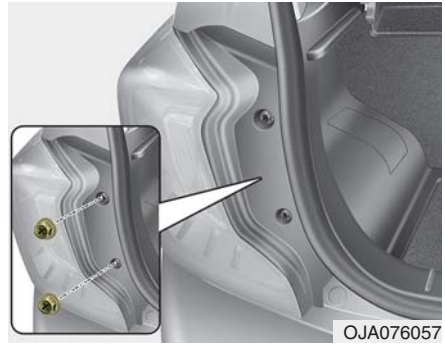
OJA076057

1. Open the tailgate.
2. Loosen the light assembly retaining screws with a cross-tip screwdriver.

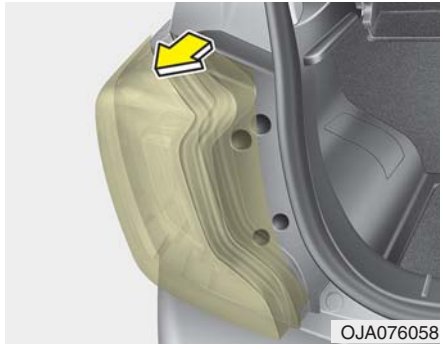
OJA076058

3. Remove the rear combination lamp assembly from the body of the vehicle.
4. Disconnect the rear combination lamp connector.

■ Tail lamp

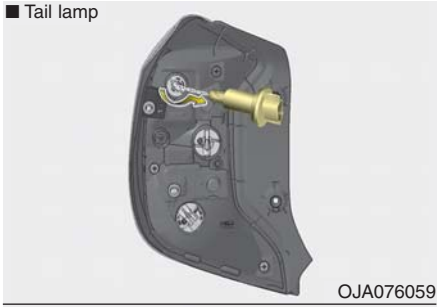

OJA076059

■ Stop and tail lamp

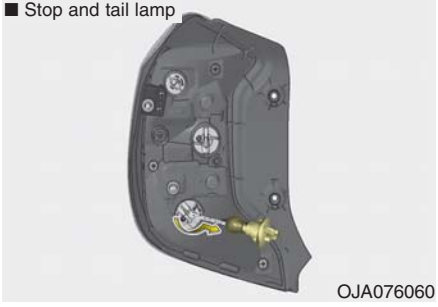

OJA076060

5. Remove the socket from the assembly by turning the socket counterclockwise until the tabs on the socket align with the slots on the assembly.
6. Remove the bulb from the socket by pressing it in and rotating it counterclockwise until the tabs on the bulb align with the slots in the socket. Pull the bulb out of the socket.
7. Insert a new bulb by inserting it into the socket and rotating it until it locks into place.
8. Install the socket in the assembly by aligning the tabs on the socket with the slots in the assembly. Push the socket into the assembly and turn the socket clockwise.
9. Install the rear combination lamp assembly to the body of the vehicle.

Rear turn signal lamp bulb replacement

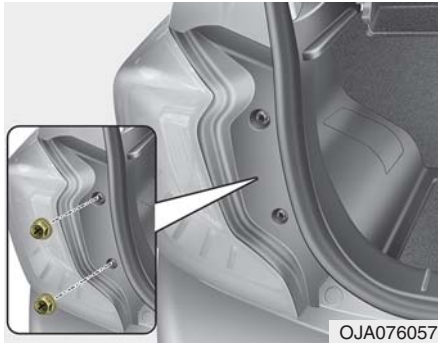

OJA076057

1. Open the tailgate.
2. Loosen the light assembly retaining screws with a cross-tip screwdriver.

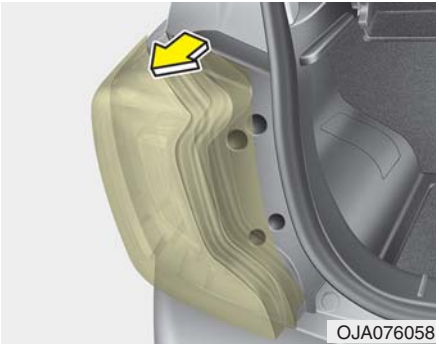
OJA076058

3. Remove the rear combination lamp assembly from the body of the vehicle.
4. Disconnect the rear combination lamp connector.

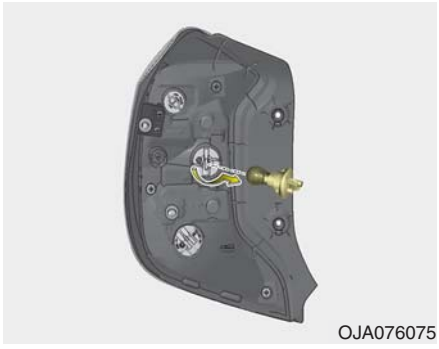
OJA076075

5. Remove the socket from the assembly by turning the socket counterclockwise until the tabs on the socket align with the slots on the assembly.
6. Remove the bulb from the socket by pressing it in and rotating it counterclockwise until the tabs on the bulb align with the slots in the socket. Pull the bulb out of the socket.
7. Insert a new bulb by inserting it into the socket and rotating it until it locks into place.
8. Install the socket in the assembly by aligning the tabs on the socket with the slots in the assembly. Push the socket into the assembly and turn the socket clockwise.
9. Install the rear combination lamp assembly to the body of the vehicle.

Stop and tail lamp (LED type) bulb replacement

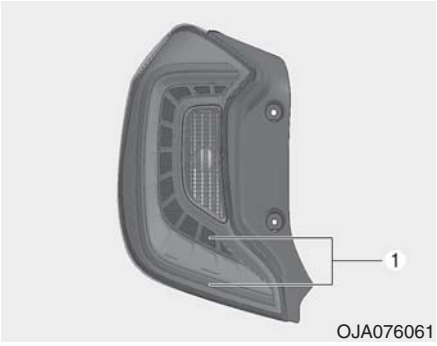

If the stop and tail lamp (LED) (1) does not operate, have your vehicle checked by a professional workshop. Kia recommends to visit an authorised Kia dealer/service partner.

Back-up lamp bulb replacement

■ Back up lamp - Type A

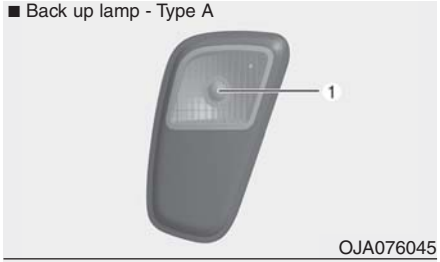

■ Back up lamp - Type B

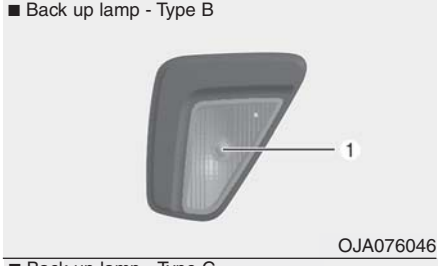

■ Back up lamp - Type C

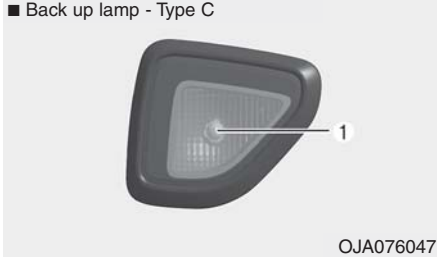

If the Back-up lamp (1) does not operate, have your vehicle checked by a professional workshop. Kia recommends to visit an authorised Kia dealer/service partner.

Rear fog lamp bulb replacement

■ Rear fog lamp - Type A



OJA076048

■ Rear fog lamp - Type B

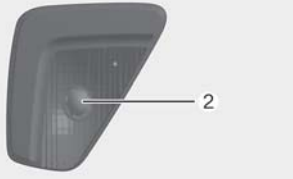

OJA076049

■ Rear fog lamp - Type C



OJA076050

If the Rear fog lamp bulb (2) does not operate, have your vehicle checked by a professional workshop. Kia recommends to visit an authorised Kia dealer/service partner.

High mounted stop lamp bulb replacement

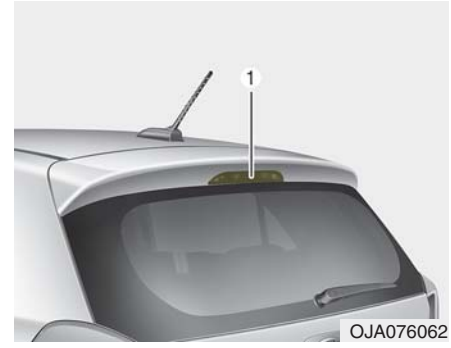

OJA076062

If the high mounted stop lamp (1) does not operate, have your vehicle checked by a professional workshop. Kia recommends to visit an authorised Kia dealer/service partner.

License plate lamp bulb replacement

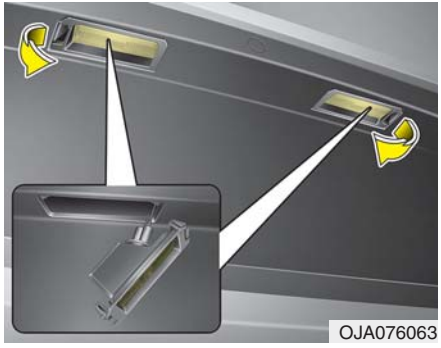

1. Using a flat-blade screwdriver, gently pry the lens cover from lamp housing.
2. Remove the socket from the assembly by turning the socket counterclockwise until the tabs on the socket align with the slots on the assembly.
3. Remove the bulb from bulb-socket by pulling it out.
4. Insert a new bulb by inserting it into the bulb-socket.
5. Install the socket in the assembly by aligning the tabs on the socket with the slots in the assembly. Push the socket into the assembly and turn the socket clockwise.
6. Align the lens cover tabs with the lamp housing notches and snap the lens into place.

Map lamp bulb replacement (if equipped)

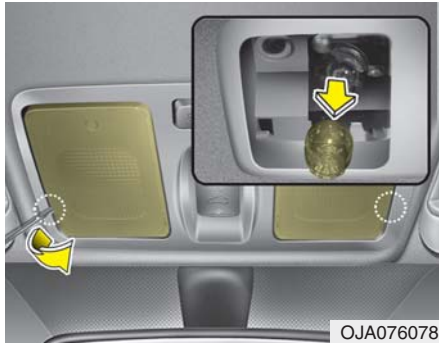

⚠ WARNING

Prior to working on the Interior lamps, ensure that the "OFF" button is depressed to avoid burning your fingers or receiving an electric shock.

1. Using a flat-blade screwdriver, gently pry the lens cover from lamp housing.
2. Remove the bulb by pulling it straight out.
3. Install a new bulb in the socket.
4. Align the lens cover tabs with the lamp housing notches and snap the lens into place.

⚠ CAUTION

Be careful not to dirty or damage the lens, lens tab, and plastic housings.

Vanity mirror lamp bulb replacement (if equipped)

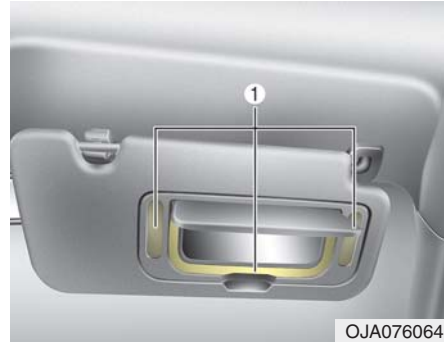

If the vanity mirror lamp bulb (LED type) (1) does not operate, have your vehicle checked by a professional workshop. Kia recommends to visit an authorised Kia dealer/service partner.

Room lamp bulb replacement (if equipped)

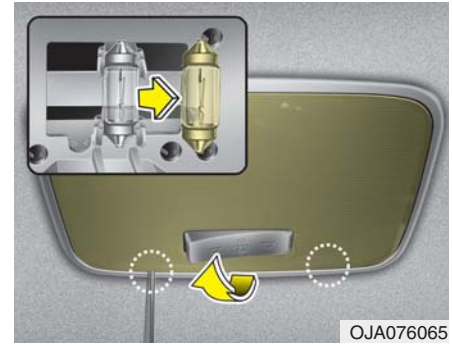

⚠ WARNING

Prior to working on the Interior lamps, ensure that the "OFF" button is depressed to avoid burning your fingers or receiving an electric shock.

1. Using a flat-blade screwdriver, gently pry the lens cover from lamp housing.
2. Remove the bulb by pulling it straight out.
3. Install a new bulb in the socket.
4. Align the lens cover tabs with the lamp housing notches and snap the lens into place.

⚠ CAUTION

Be careful not to dirty or damage the lens, lens tab, and plastic housings.

Glove box lamp bulb replacement

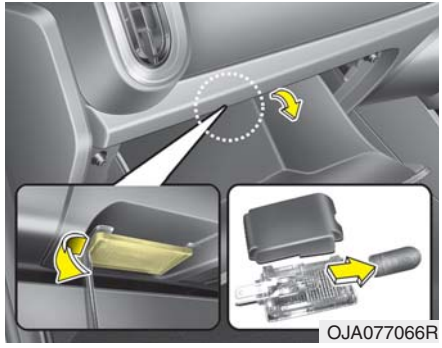
OJA077066R

1. Using a flat-blade screwdriver, gently pry the lamp assembly from interior.
2. Remove the bulb by pulling it straight out.
3. Install a new bulb in the socket.
4. Install the lamp assembly to interior.

⚠ CAUTION

Be careful not to dirty or damage the lens, lens tab, and plastic housings.

Tailgate room lamp bulb replacement

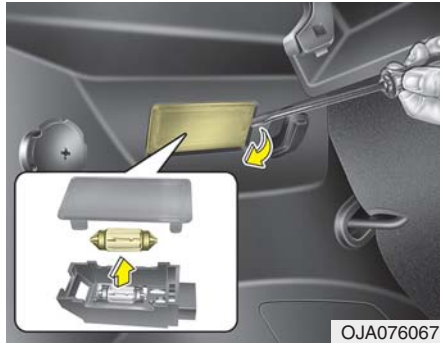
OJA076067

1. Using a flat-blade screwdriver, gently pry the lens cover from lamp housing.
2. Remove the bulb by pulling it straight out.
3. Install a new bulb in the socket.
4. Align the lens cover tabs with the lamp housing notches and snap the lens into place.

⚠ CAUTION

Be careful not to dirty or damage the lens, lens tab, and plastic housings.

Headlamp and front fog lamp aiming (for Europe)

Headlamp aiming

■ Type A

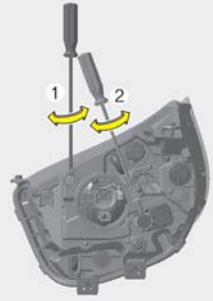

OJA076068

■ Type B

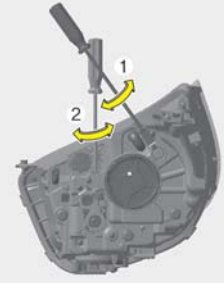

OJA076069

1. Inflate the tyres to the specified pressure and remove any loads from the vehicle except the driver, spare tyre, and tools.
2. The vehicle should be placed on a flat floor.
3. Draw vertical lines (Vertical lines passing through respective head lamp centres) and a horizontal line (Horizontal line passing through centre of head lamps) on the screen.
4. With the head lamp and battery in normal condition, aim the head lamps so the brightest portion falls on the horizontal and vertical lines.
5. To aim the low and high beams left or right, turn the driver (1) clockwise or counterclockwise. To aim the low and high beams up or down, turn the driver (2) clockwise or counterclockwise.

Front fog lamp aiming

■ Type A



OJA076070

■ Type B



OJA076071

■ Type C

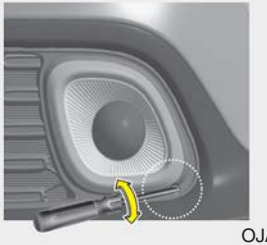

OJA076072

The front fog lamp can be aimed as the same manner of the head lamps aiming.

With the front fog lamps and battery normal condition, aim the front fog lamps.

To aim the front fog lamp up or down, turn the driver clockwise or counterclockwise.

Aiming point

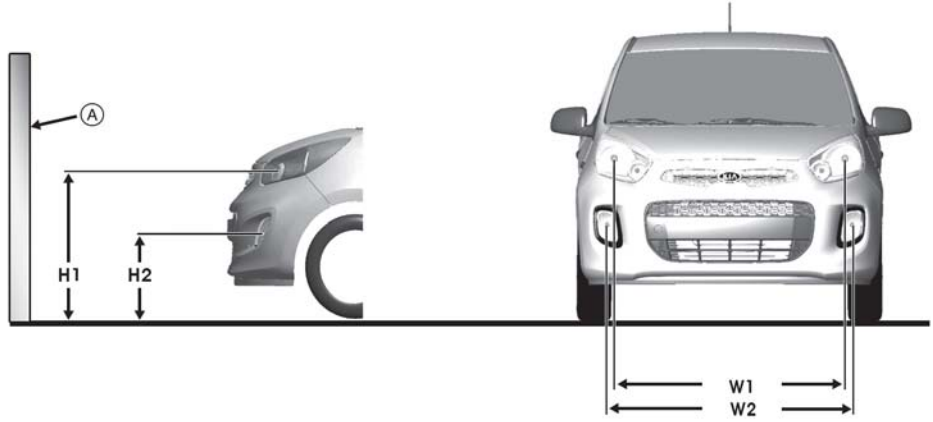

OJA076073

* A : Screen

Unit: mm (in)

Vehicle condition	Head lamp (MFR type)		Head lamp (Projection type)	
	Ground Height	Distance between lamps	Ground Height	Distance between lamps
	Low/High beam	Low/High beam	Low/High beam	Low/High beam
	H1	W1	H1'	W1'
Without driver [mm (in)]	755 (29.7)	1,060 (41.7)	768 (30.2)	1,117 (44.0)
With driver [mm (in)]	745 (29.3)	1,060 (41.7)	758 (29.8)	1,117 (44.0)

Vehicle condition	Front Fog lamp (Type A)		Front Fog lamp (Type B)		Front Fog lamp (Type C)	
	Ground Height	Distance between lamps	Ground Height	Distance between lamps	Ground Height	Distance between lamps
	H2	W2	H2'	W2'	H2''	W2''
Without driver [mm (in)]	495 (19.5)	1,336 (52.6)	326 (12.8)	996 (39.2)	335 (13.2)	932 (36.7)
With driver [mm (in)]	485 (19.1)	1,336 (52.6)	316 (12.4)	996 (39.2)	325 (12.8)	932 (36.7)

■ Based on 10m screen

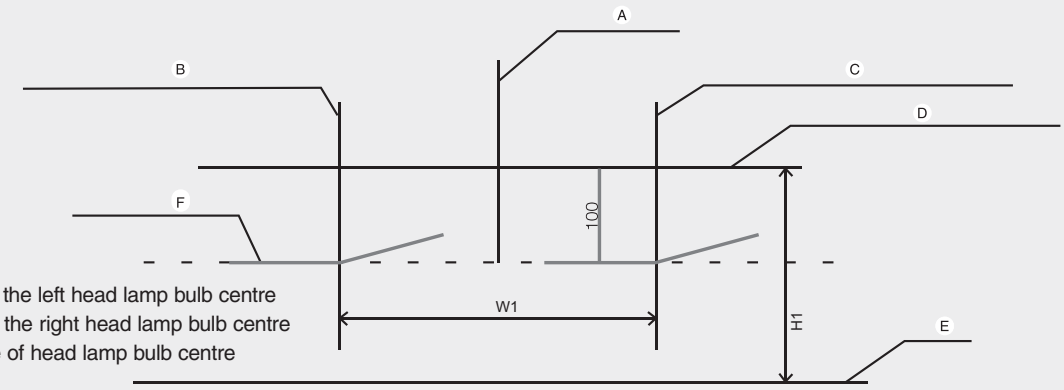

A : Vehicle axis
B : Vertical line of the left head lamp bulb centre
C : Vertical line of the right head lamp bulb centre
D : Horizontal line of head lamp bulb centre
E : Ground
F : Cut-Off line

OJF075107L

Head lamp low beam (LHD Vehicle)

1. Turn the low beam on without driver aboard.
2. The cut-off line should be projected in the cut-off line shown in the picture.
3. When aiming the low beam, vertical aiming should be adjusted after adjusting the horizontal aiming.
4. If head lamp levelling device is equipped, adjust the head lamp levelling device switch with 0 positions.

■ Based on 10m screen

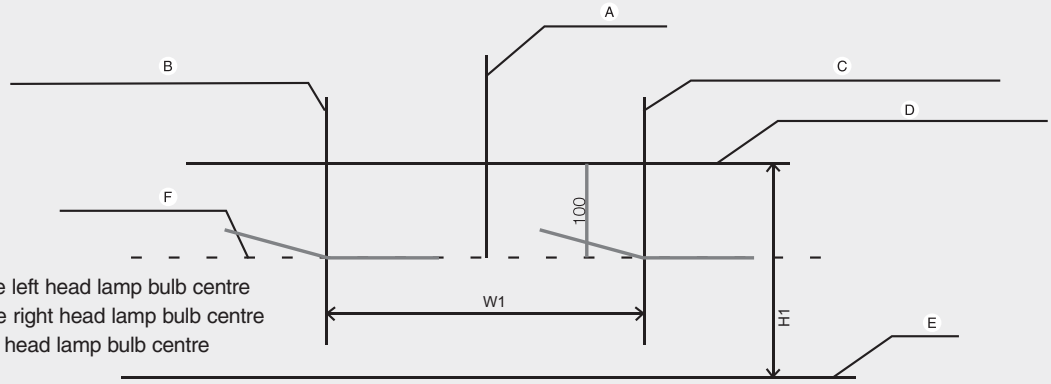

A : Vehicle axis
B : Vertical line of the left head lamp bulb centre
C : Vertical line of the right head lamp bulb centre
D : Horizontal line of head lamp bulb centre
E : Ground
F : Cut-Off line

OJF075108L

Head lamp low beam (RHD Vehicle)

1. Turn the low beam on without driver aboard.
2. The cut-off line should be projected in the cut-off line shown in the picture.
3. When aiming the low beam, vertical aiming should be adjusted after adjusting the horizontal aiming.
4. If head lamp levelling device is equipped, adjust the head lamp levelling device switch with 0 positions.

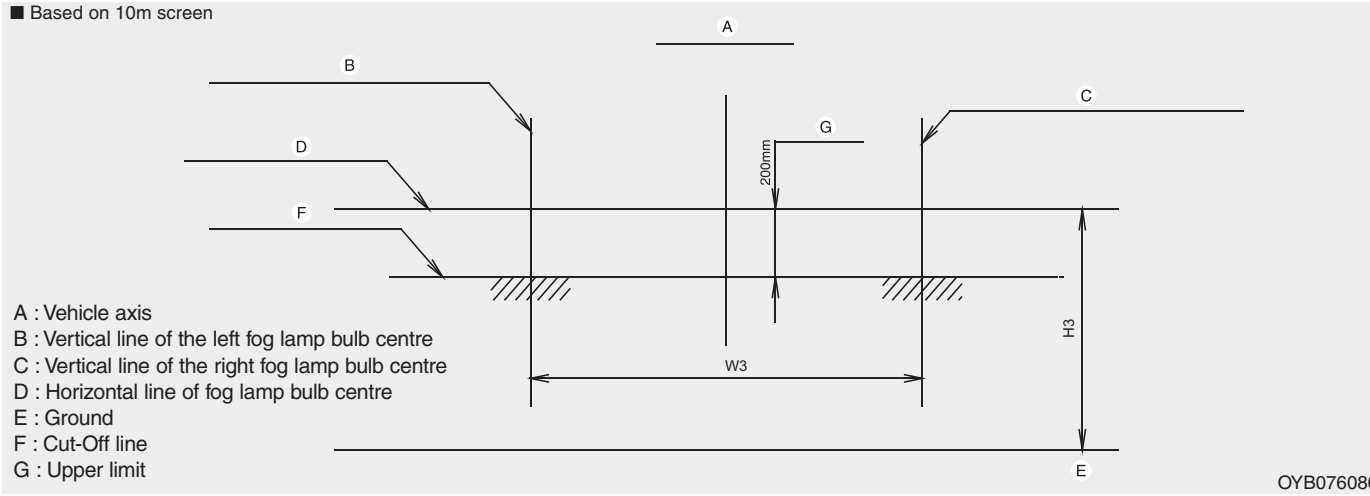

Front fog lamp

1. Turn the front fog lamp on without the driver aboard.
2. The cut-off line should be projected in the allowable range (shaded region).

APPEARANCE CARE

Exterior care

Exterior general caution

It is very important to follow the label directions when using any chemical cleaner or polish. Read all warning and caution statements that appear on the label.

Finish maintenance

Washing

To help protect your vehicle's finish from rust and deterioration, wash it thoroughly and frequently at least once a month with lukewarm or cold water.

If you use your vehicle for off-road driving, you should wash it after each off-road trip. Pay special attention to the removal of any accumulation of salt, dirt, mud, and other foreign materials. Make sure the drain holes in the lower edges of the doors and rocker panels are kept clear and clean.

Insects, tar, tree sap, bird droppings, industrial pollution and similar deposits can damage your vehicle's finish if not removed immediately.

⚠ CAUTION

- ***Do not use strong soap, chemical detergents or hot water, and do not wash the vehicle in direct sunlight or when the body of the vehicle is warm.***
- ***Be careful when washing the side windows of your vehicle.***

  Especially, with high-pressure water, water may leak through the windows and wet the interior.
- ***To prevent damage to the plastic parts and lamps, do not clean with chemical solvents or strong detergents.***

⚠ WARNING - Wet brakes

After washing the vehicle, test the brakes whilst driving slowly to see if they have been affected by water. If braking performance is impaired, dry the brakes by applying them lightly whilst maintaining a slow forward speed.

High-pressure washing

- When using high-pressure washers, make sure to maintain sufficient distance from the vehicle.

  Insufficient clearance or excessive pressure can lead to component damage or water penetration.
- Do not spray the camera, sensors or its surrounding area directly with a high pressure washer. Shock applied from high pressure water may cause the device to not operate normally.
- Do not bring the nozzle tip close to boots (rubber or plastic covers) or connectors as they may be damaged if they come into contact with high pressure water.

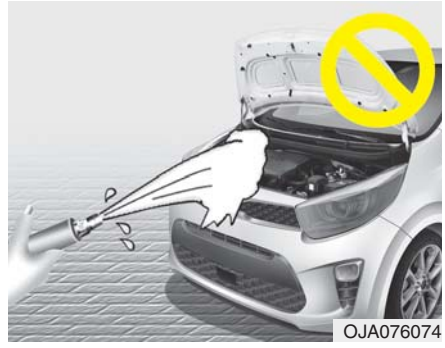
OJA076074

⚠ CAUTION

- ***Water washing in the engine compartment including high pressure water washing may cause the failure of electrical circuits located in the engine compartment.***
- ***Never allow water or other liquids to come in contact with electrical/electronic components inside the vehicle as this may damage them.***

Waxing

Wax the vehicle when water will no longer bead on the paint.
Always wash and dry the vehicle before waxing. Use a good quality liquid or paste wax, and follow the manufacturer's instructions. Wax all metal trim to protect it and to maintain its luster.
Removing oil, tar, and similar materials with a spot remover will usually strip the wax from the finish. Be sure to re-wax these areas even if the rest of the vehicle does not yet need waxing.
Do not apply wax on embossed unpainted unit, as it may tarnish the unit.

⚠ CAUTION

- ***Wiping dust or dirt off the body with a dry cloth will scratch the finish.***
- ***Do not use steel wool, abrasive cleaners, acid detergents or strong detergents containing high alkaline or caustic agents on chrome-plated or anodized aluminum parts. This may result in damage to the protective coating and cause discoloration or paint deterioration.***

Finish damage repair

Deep scratches or stone chips in the painted surface must be repaired promptly. Exposed metal will quickly rust and may develop into a major repair expense.

✻ NOTICE

If your vehicle is damaged and requires any metal repair or replacement, be sure the body shop applies anti-corrosion materials to the parts repaired or replaced.

Bright-metal maintenance

- To remove road tar and insects, use a tar remover, not a scraper or other sharp object.
- To protect the surfaces of bright-metal parts from corrosion, apply a coating of wax or chrome preservative and rub to a high luster.
- During winter weather or in coastal areas, cover the bright metal parts with a heavier coating of wax or preservative. If necessary, coat the parts with non-corrosive petroleum jelly or other protective compound.

Underbody maintenance

Corrosive materials used for ice and snow removal and dust control may collect on the underbody. If these materials are not removed, accelerated rusting can occur on underbody parts such as the fuel lines, frame, floor pan and exhaust system, even though they have been treated with rust protection.

Thoroughly flush the vehicle underbody and wheel openings with lukewarm or cold water once a month, after off-road driving and at the end of each winter. Pay special attention to these areas because it is difficult to see all the mud and dirt. It will do more harm than good to wet down the road grime without removing it. The lower edges of the doors, rocker panels, and frame members have drain holes that should not clog with dirt; trapped water in these areas can cause rusting.

⚠ WARNING

After washing the vehicle, test the brakes whilst driving slowly to see if they have been affected by water. If braking performance is impaired, dry the brakes by applying them lightly whilst maintaining a slow forward speed.

Aluminum wheel maintenance

The aluminum wheels are coated with a clear protective finish.

- Do not use any abrasive cleaner, polishing compound, solvent, or wire brushes on aluminum wheels. They may scratch or damage the finish.
- Clean the wheel when it has cooled.
- Use only a mild soap or neutral detergent, and rinse thoroughly with water. Also, be sure to clean the wheels after driving on salted roads. This helps prevent corrosion.
- Avoid washing the wheels with high-speed car wash brushes.
- Do not use any alkaline or acid detergent. It may damage and corrode the aluminum wheels coated with a clear protective finish.

Corrosion protection

Protecting your vehicle from corrosion

By using the most advanced design and construction practices to combat corrosion, we produce vehicles of the highest quality. However, this is only part of the job. To achieve the long-term corrosion resistance your vehicle can deliver, the owner's cooperation and assistance is also required.

Common causes of corrosion

The most common causes of corrosion on your vehicle are:

- Road salt, dirt and moisture that is allowed to accumulate underneath the vehicle.
- Removal of paint or protective coatings by stones, gravel, abrasion or minor scrapes and dents which leave unprotected metal exposed to corrosion.

High-corrosion areas

If you live in an area where your vehicle is regularly exposed to corrosive materials, corrosion protection is particularly important. Some of the common causes of accelerated corrosion are road salts, dust control chemicals, ocean air and industrial pollution.

Moisture breeds corrosion

Moisture creates the conditions in which corrosion is most likely to occur. For example, corrosion is accelerated by high humidity, particularly when temperatures are just above freezing. In such conditions, the corrosive material is kept in contact with the vehicle's surface by moisture that evaporate slowly.
Mud is particularly corrosive because it dries slowly and holds moisture in contact with the vehicle. Although the mud appears to be dry, it can still retain moisture and promote corrosion.
High temperatures can also accelerate corrosion of parts that are not properly ventilated so the moisture can be dispersed.

For all these reasons, it is particularly important to keep your vehicle clean and free of mud or accumulations of other materials. This applies not only to the visible surfaces but particularly to the underside of the vehicle.

To help prevent corrosion

You can help prevent corrosion from getting started by observing the following:

Keep your vehicle clean

The best way to prevent corrosion is to keep your vehicle clean and free of corrosive materials. Attention to the underside of the vehicle is particularly important.

- If you live in a high-corrosion area — where road salts are used, near the ocean, areas with industrial pollution, acid rain, etc.—, you should take extra care to prevent corrosion. In winter, hose off the underside of your vehicle at least once a month and be sure to clean the underside thoroughly when winter is over.
- When cleaning underneath the vehicle, give particular attention to the components under the fenders and other areas that are hidden from view. Do a thorough job; just dampening the accumulated mud rather than washing it away will accelerate corrosion rather than prevent it. Water under high pressure and steam are particularly effective in removing accumulated mud and corrosive materials.
- When cleaning lower door panels, rocker panels and frame members, be sure that drain holes are kept open so that moisture can escape and not be trapped inside to accelerate corrosion.

Keep your garage dry

Don't park your vehicle in a damp, poorly ventilated garage. This creates a favorable environment for corrosion. This is particularly true if you wash your vehicle in the garage or drive it into the garage when it is still wet or covered with snow, ice or mud. Even a heated garage can contribute to corrosion unless it is well ventilated so moisture is dispersed.

Keep paint and trim in good condition

Scratches or chips in the finish should be covered with "touch-up" paint as soon as possible to reduce the possibility of corrosion. If bare metal is showing through, the attention of a qualified body and paint shop is recommended.

Bird droppings : Bird droppings are highly corrosive and may damage painted surfaces in just a few hours. Always remove bird droppings as soon as possible.

Don't neglect the interior

Moisture can collect under the floor mats and carpeting and cause corrosion. Check under the mats periodically to be sure the carpeting is dry. Use particular care if you carry fertilizers, cleaning materials or chemicals in the vehicle.

These should be carried only in proper containers and any spills or leaks should be cleaned up, flushed with clean water and thoroughly dried.

Interior care

Interior general precautions

Prevent chemicals such as perfume, cosmetic oil, sun cream, hand cleaner, and air freshener from contacting the interior parts because they may cause damage or discoloration. If they do contact the interior parts, wipe them off immediately. If necessary, use a vinyle cleaner, see instructions for correct usage.

⚠ CAUTION

Never allow water or other liquids to come in contact with electrical/electronic components inside the vehicle as this may damage them.

⚠ CAUTION

When cleaning leather products (steering wheel, seats etc.), use neutral detergents or low alcohol content solutions. If you use high alcohol content solutions or acid/alkaline detergents, the colour of the leather may fade or the surface may get stripped off.

Taking care of leather seats

- Vacuum the seat periodically to remove dust and sand on the seat. It will prevent abrasion or damage of the leather and maintain its quality.
- Wipe the natural leather seat cover often with dry or soft cloth.
- Sufficient use of a leather protective may prevent abrasion of the cover and helps maintain the colour.

  Be sure to read the instructions and consult a specialist when using leather coating or protective agents.
- Leather with bright colours(beige, cream beige) is easily contaminated and clear in appearance. Clean the seats frequently.
- Avoid wiping with wet cloth. It may cause the surface to crack.

Cleaning the leather seats

- Remove all contaminations instantly. Refer to instructions below for removal of each contaminant.
- Cosmetic products(sunscreen, foundation, etc.)
  - Apply cleansing cream on a cloth and wipe the contaminated point. Wipe off the cream with a wet cloth and remove water with a dry cloth.
- Beverages(coffee, soft drink, etc.)
  - Apply a small amount of neutral detergent and wipe until contaminations do not smear.
- Oil
  - Remove oil instantly with absorbable cloth and wipe with stain remover for natural leather only.
- Chewing gum
  - Harden the gum with ice and remove gradually.

Fabric seat cover (If equipped)

Please clean the fabric seats regularly with a vacuum cleaner in consideration of fabric material characteristics. If they are heavily soiled with beverage stains, etc., use a suitable interior cleaner. To prevent damage to seat covers, wipe off the seat covers down to the seams with a large wiping motion and moderate pressure using a soft sponge or microfiber cloth.

Velcro closures on clothing or sharp objects may cause snagging or scratches on the surface of the seats. Make sure not to rub such objects against the surface.

Cleaning the upholstery and interior trim

Vinyl

Remove dust and loose dirt from vinyl with a whisk broom or vacuum cleaner. Clean vinyl surfaces with a vinyl cleaner.

Fabric

Remove dust and loose dirt from fabric with a whisk broom or vacuum cleaner. Clean with a mild soap solution recommended for upholstery or carpets. Remove fresh spots immediately with a fabric spot cleaner. If fresh spots do not receive immediate attention, the fabric can be stained and its colour can be affected. Also, its fire-resistant properties can be reduced if the material is not properly maintained.

⚠ CAUTION

Using anything but recommended cleaners and procedures may affect the fabric's appearance and fire-resistant properties.

Cleaning the lap/shoulder belt webbing

Clean the belt webbing with any mild soap solution recommended for cleaning upholstery or carpet. Follow the instructions provided with the soap. Do not bleach or re-dye the webbing because this may weaken it.

Cleaning the interior window glass

If the interior glass surfaces of the vehicle become fogged (that is, covered with an oily, greasy or waxy film), they should be cleaned with a glass cleaner. Follow the directions on the glass cleaner container.

⚠ CAUTION

Do not scrape or scratch the inside of the rear window. This may result in damage of the rear window defroster grid.

EMISSION CONTROL SYSTEM (IF EQUIPPED)

The emission control system of your vehicle is covered by a written limited warranty. Please see the warranty information contained in the Warranty & Maintenance book in your vehicle.

Your vehicle is equipped with an emission control system to meet all applicable emission regulations.

There are three emission control systems, as follows.

(1) Crankcase emission control system
(2) Evaporative emission control system
(3) Exhaust emission control system

In order to assure the proper function of the emission control systems, have your vehicle inspected and maintained by a professional workshop in accordance with the maintenance schedule in this manual. Kia recommends to visit an authorised Kia dealer/service partner.

Caution for the Inspection and Maintenance Test (With Electronic Stability Control (ESC) system)

- **To prevent the vehicle from misfiring during dynamometer testing, turn the Electronic Stability Control (ESC) system off by pressing the ESC switch.**
- **After dynamometer testing is completed, turn the ESC system back on by pressing the ESC switch again.**

1. Crankcase emission control system

The positive crankcase ventilation system is employed to prevent air pollution caused by blow-by gases being emitted from the crankcase. This system supplies fresh filtered air to the crankcase through the air intake hose. Inside the crankcase, the fresh air mixes with blow-by gases, which then pass through the PCV valve into the induction system.

2. Evaporative emission control system

The Evaporative Emission Control System is designed to prevent fuel vapours from escaping into the atmosphere.

Canister

Fuel vapours generated inside the fuel tank are absorbed and stored in the onboard canister. When the engine is running, the fuel vapours absorbed in the canister are drawn into the surge tank through the purge control solenoid valve.

Purge Control Solenoid Valve (PCSV)

The purge control solenoid valve is controlled by the Engine Control Module (ECM); when the engine coolant temperature is low during idling, the PCSV closes so that evaporated fuel is not taken into the engine. After the engine warms up during ordinary driving, the PCSV opens to introduce evaporated fuel to the engine.

3. Exhaust emission control system

The Exhaust Emission Control System is a highly effective system which controls exhaust emissions whilst maintaining good vehicle performance.

Vehicle modifications

This vehicle should not be modified. Modification of your vehicle could affect its performance, safety or durability and may even violate governmental safety and emissions regulations.

In addition, damage or performance problems resulting from any modification may not be covered under warranty.

- If you use unauthorised electronic devices, it may cause the vehicle to operate abnormally, wire damage, battery discharge and fire. For your safety, do not use unauthorised electronic devices.

Engine exhaust gas precautions (carbon monoxide)

- Carbon monoxide can be present with other exhaust fumes. Therefore, if you smell exhaust fumes of any kind inside your vehicle, have it inspected and repaired immediately. If you ever suspect exhaust fumes are coming into your vehicle, drive it only with all the windows fully open. Have your vehicle checked and repaired immediately.

⚠ WARNING - Exhaust

Engine exhaust gases contain carbon monoxide (CO). Though colourless and odourless, it is dangerous and could be lethal if inhaled. Follow the instructions on this page to avoid CO poisoning.

- Do not operate the engine in confined or closed areas (such as garages) any more than what is necessary to move the vehicle in or out of the area.
- When the vehicle is stopped in an open area for more than a short time with the engine running, adjust the ventilation system (as needed) to draw outside air into the vehicle.
- Never sit in a parked or stopped vehicle for any extended time with the engine running.
- When the engine stalls or fails to start, excessive attempts to restart the engine may cause damage to the emission control system.

Operating precautions for catalytic converters (if equipped)

⚠ WARNING - Fire

- **A hot exhaust system can ignite flammable items under your vehicle. Do not park the vehicle over or near flammable objects, such as grass, vegetation, paper, leaves, etc.**
- **The exhaust system and catalytic system are very hot whilst the engine is running or immediately after the engine is turned off. Keep away from the exhaust system and catalytic, you may get burned.**

  Also, do not remove the heat sink around the exhaust system, do not seal the bottom of the vehicle or do not coat the vehicle for corrosion control. It may present a fire risk under certain conditions.

Your vehicle is equipped with a catalytic converter emission control device.

Therefore, the following precautions must be observed:

- Make sure to refuel your vehicle according to the "Fuel requirements" suggested in chapter 1.
- Do not operate the vehicle when there are signs of engine malfunction, such as misfire or a noticeable loss of performance.
- Do not misuse or abuse the engine. Examples of misuse are coasting with the ignition off and descending steep grades in gear with the ignition off.
- Do not operate the engine at high idle speed for extended periods (5 minutes or more).
- Do not modify or tamper with any part of the engine or emission control system. All inspections and adjustments must be made by a professional workshop. Kia recommends to visit an authorised Kia dealer/service center.

- Avoid driving with an extremely low fuel level. Running out of fuel could cause the engine to misfire, damaging the catalytic converter.

Failure to observe these precautions could result in damage to the catalytic converter and to your vehicle.

Additionally, such actions could void your warranties.

Petrol Particulate Filter (PPF) (if equipped)

The Petrol Particulate Filter (PPF) is the system that removes the soot from the exhaust gas. Unlike a disposable air filter, the PPF system automatically burns (oxidizes) and removes the accumulated soot while driving.

However, repeated short-distance driving or long-distance driving at a low speed can stop the accumulated soot from automatically being removed by the PPF system. If the accumulated soot reaches a certain amount, the PPF warning light ( ) will illuminate. To re-operate the PPF system, the vehicle should be driven for more than 30 minutes at a speed of 80km/h (50 mph) and faster. Ensure the following conditions are met: safe road conditions, transmission 3 or above, and engine speed of 1,500-4,000 rpm. Driving at 80 km/h (50 mph) or faster for recommended hours will get the PPF system back to work and stop the PPF warning light.

If the PPF warning light stays on or the warning message “Check exhaust system” pops up even after driving at recommended speed and for recommended hours, visit a professional workshop and check the PPF system. Kia recommends to visit an authorised Kia dealer/service partner. Constant driving with the PPF warning light on can damage the PPF system and undermine fuel economy.

Specifications & Consumer information

Engine 9-2
Dimensions 9-3
Bulb wattage 9-4
Tyres and wheels 9-5
Weight/volume 9-7
Air conditioning system 9-7
Recommended lubricants and capacities 9-8
• Recommended SAE viscosity number. 9-10
Vehicle identification number (VIN) 9-11
Vehicle certification label. 9-11
Tyre specification and pressure label 9-12
Engine number 9-12
Air conditioner compressor label 9-13
Refrigerant label. 9-13
Declaration of conformity 9-13
Fuel label 9-14
• Petrol (Gasoline) engine 9-14

ENGINE

Item	Petrol 1.0	Petrol 1.2
Displacement [cc(cu.in)]	998 (60.9)	1,248 (76.2)
Bore x Stroke [mm(in)]	71 x 84 (2.8 x 3.3)	71 x 78.8 (2.80 x 3.10)
Firing order	1-2-3	1-3-4-2
No. of cylinders	3	4, In-line

DIMENSIONS

Item			mm (in)
Overall length			3,595 (141.5) (X-line : 3,670 (144.5))
Overall width			1,595 (62.8) (X-line : 1,625 (64.0))
Overall height	For Europe, Australia		1,485 (58.5) (X-line : 1,500 (59.1))
	Except Europe, Australia		1,495 (58.9) (X-line : 1,500 (59.1))
Front tread	For Europe, Australia	155/80R13	1,420 (55.9)
		175/65R14	1,406 (55.4)
		185/55R15	1,394 (54.9)
		195/45R16	1,394 (54.9)
	Except Europe, Australia	155/80R13	1,419 (55.9)
		175/65R14	1,405 (55.3)
		185/55R15	1,393 (54.8)
Rear tread	For Europe, Australia	155/80R13	1,423 (56.0)
		175/65R14	1,415 (55.7)
		185/55R15	1,403 (55.2)
		195/45R16	1,403 (55.2)
	Except Europe, Australia	155/80R13	1,423 (56.0)
		175/65R14	1,415 (55.7)
		185/55R15	1,403 (55.2)
Wheelbase			2,400 (94.5)

BULB WATTAGE

Light Bulb				Wattage (W)	Bulb type
Front	Head lamp	Low	Standard	55W	H4
			Option *	60W	HB3
		High	Standard	60W	H4
			Option *	60W	HB3
	Daytime running light *			21W or LED	P21W or LED
	Position lamp			5W or LED	W5W or LED
	Turn signal lamp			21W or LED	PY21/5W or LED
	Front fog lamp *			51W	HB4
Rear	Tail lamp		Outside	10W or LED	P21/5W, W5W or LED
	Stop lamp		Outside	21W or LED	P21/5W or LED
	Turn signal lamp			21W	PY21W
	Back up lamp			16W	W16W
	Rear fog light *			21W	P21W
	High mounted stop lamp			5W X 4EA	W5W
	License plate lamp			5W X 2EA	W5W
Interior	Map lamps *			10W X 2EA	W10W
	Room lamp			8W	FESTOON
	Luggage lamp			5W	FESTOON
	Vanity mirror lamps *			LED	LED

* If equipped

TYRES AND WHEELS

For Europe, Australia and New Zealand

Item	Tyre size	Wheel size	Load Capacity		Speed capacity		Inflation pressure [bar(psi, kPa)]				Wheel lug nut torque Kgf·m (lbf·ft, N·m)
							Normal load		Maximum load		
			LI *1	Kg	SS *2	Km/h	Front	Rear	Front	Rear	
Full size tyre	155/80R13	4.5J X 13	79	437	T	190	230 (33, 2.3)	210 (30,2.1)	230 (33, 2.3)	250 (36,2.5)	11~13 (79~94, 107~127)
	175/65R14	5.5J X 14	86	530	T	190	230 (33, 2.3)	210 (30,2.1)	230 (33, 2.3)	250 (36,2.5)	
							250 (36,2.5) (Eco Pack)	250 (36,2.5) (Eco Pack)	250 (36,2.5) (Eco Pack)	250 (36,2.5) (Eco Pack)	
	185/55R15	6.0J X 15	86	530	H	210	230 (33, 2.3)	210 (30,2.1)	230 (33, 2.3)	250 (36,2.5)	
	195/45R16	6.5J X 16	84	500	V	240	230 (33, 2.3)	210 (30,2.1)	230 (33, 2.3)	250 (36,2.5)	
Compact spare tyre	T115/70D15	3.5J X 15	90	600	M	130	420 (60,4.2)				

*1 : Load Index

*2 : Speed Symbol

Except Europe, Australia and New Zealand

Item	Tyre size	Wheel size	Load Capacity		Speed capacity		Inflation pressure [bar(psi, kPa)]				Wheel lug nut torque Kgf·m (lbf·ft, N·m)
							Normal load		Maximum load		
			LI *1	Kg	SS *2	Km/h	Front	Rear	Front	Rear	
Full size tyre	155/80R13	4.5J X 13	79	437	T	190	230 (33, 2.3)	210 (30,2.1)	230 (33, 2.3)	230 (33, 2.3)	11~13 (79~94, 107~127)
	175/65R14	5.5J X 14	86	530	T	190	230 (33, 2.3)	210 (30,2.1)	230 (33, 2.3)	230 (33, 2.3)	
	185/55R15	6.0J X 15	86	530	H	210	230 (33, 2.3)	210 (30,2.1)	230 (33, 2.3)	230 (33, 2.3)	
Compact spare tyre	T115/70D15	3.5J X 15	90	600	M	130	420 (60,4.2)				

*1 : Load Index

*2 : Speed Symbol

✻ NOTICE

- **We recommend that when replacing tyres, use the same originally supplied with the vehicles. If not, that affects driving performance.**
- **When driving in high altitude grades, it is natural for the atmospheric pressure to decrease. Therefore, please check the tyre pressure and add more air when necessary. Additionally required tyre air pressure per km above sea level: 1.5psi/km**

⚠ CAUTION

When replacing tyres, use the same size originally supplied with the vehicle. Using tyres of a different size can damage the related parts or make it work irregularly.

WEIGHT/VOLUME

Item		Petrol 1.0 (Eco pack)	Petrol 1.0 / Petrol 1.0 T-GDI	Petrol 1.2
Gross vehicle weight kg (lbs.)	For Australia	-	-	1,430 (3,152)
	For Europe	1,300 (2,866)	1,400 (3,086)	1,400 (3,086)
	Except Europe, Australia	-	1,370 (3,020)	1,370 (3,020)
Luggage volume *l* (cu ft)	MIN	255 (9.0)		
	MAX	1,010 (35.7)		

AIR CONDITIONING SYSTEM

ITEM	Weight of volume	Classification
Refrigerant	400 ± 25g	R-1234yf
		R-134a
Compressor lubricant	100 ± 10g	PAG 30

Please contact a professional workshop for more details.
Kia recommends to contact an authorised Kia dealer/service partner.

RECOMMENDED LUBRICANTS AND CAPACITIES

To help achieve proper engine and powertrain performance and durability, use only lubricants of the proper quality. The correct lubricants also help promote engine efficiency that results in improved fuel economy.
These lubricants and fluids are recommended for use in your vehicle.

<table>
<tr><th colspan="2">Lubricant</th><th>Volume</th><th colspan="2">Classification</th></tr>
<tr><td rowspan="3">Engine oil *1 *2
(drain and refill)

Recommends
TOTAL QUARTZ</td><td>1.0 T-GDI</td><td>3.6 l (3.8US qt.)</td><td colspan="2">API SN & ACEA C2</td></tr>
<tr><td rowspan="2">1.0 MPI
/FFV/1.2 MPI</td><td rowspan="2">1.0 MPI/FFV :
3.0 l (3.17 US qt.)
1.2MPI :
3.5 l (3.7 US qt.)</td><td>FOR INDIA, MIDDLE EAST, IRAN, LIBIA, ALGERIA, SUDAN, MOROCCO, TUNISIA, EGYPT</td><td>API service SM, ILSAC GF4 or above, ACEA A5/B5</td></tr>
<tr><td>EXCEPT ABOVE COUNTRIES</td><td>API SN, ACEA C2</td></tr>
<tr><td rowspan="2">Manual
transaxle fluid</td><td>1.0 T-GDI</td><td>1.6~1.7 l
(1.7 ~ 1.8 US qt.)</td><td colspan="2" rowspan="2">API Service GL-4 SAE 70W
- HK SYN MTF 70W
- SPIRAX S6 GHME 70W MTF
- GS MTF HD 70W</td></tr>
<tr><td>1.0MPI /
1.2 MPI</td><td>1.3~1.4 l
(1.4 ~ 1.5 US qt.)</td></tr>
<tr><td rowspan="2">Automatic
transaxle fluid</td><td>1.0 MPI</td><td>5.7 l (6.02 US qt.)</td><td colspan="2">ATF SP-III (Recommended DIAMOND, SK)</td></tr>
<tr><td>1.2 MPI</td><td>6.1 l (6.45 US qt.)</td><td colspan="2">ATF SP-III (Recommended DIAMOND, SK)</td></tr>
</table>

Lubricant		Volume	Classification
Coolant	1.0 T-GDI	5.4 *l* (5.70 US qt.)	Mixture of antifreeze and water (Ethylene glycol base coolant for aluminum radiator)
	1.0 MPI	5.0 *l* (5.28 US qt.)	
	1.2 MPI	5.5 *l* (5.81 US qt.)	
Brake / clutch fluid		0.4 ~ 0.44 *l* (0.42 ~ 0.46 US qt.)	FMVSS116 DOT-3 or DOT-4
Fuel		35 *l* (9.24 US gal.)	-
Fuel (FFV)	Petrol reservoir	0.8 *l* (0.2 US gal.)	-
	Aclohol	38 *l* (10.03 US gal.)	-

*1 : Refer to the recommended SAE viscosity numbers on the next page.

*2 : Engine oils labeled Energy Conserving Oil are now available. Along with other additional benefits, they contribute to fuel economy by reducing the amount of fuel necessary to overcome engine friction. Often, these improvements are difficult to measure in everyday driving, but in a year's time, they can offer significant cost and energy savings.

Recommended SAE viscosity number

⚠ CAUTION

Always be sure to clean the area around any filler plug, drain plug, or dipstick before checking or draining any lubricant. This is especially important in dusty or sandy areas and when the vehicle is used on unpaved roads. Cleaning the plug and dipstick areas will prevent dirt and grit from entering the engine and other mechanisms that could be damaged.

Engine oil viscosity (thickness) has an effect on fuel economy and cold weather operating (engine start and engine oil flowability). Lower viscosity engine oils can provide better fuel economy and cold weather performance, however, higher viscosity engine oils are required for satisfactory lubrication in hot weather. Using oils of any viscosity other than those recommended could result in engine damage.

When choosing an oil, consider the range of temperature your vehicle will be operated in before the next oil change. Proceed to select the recommended oil viscosity from the chart.

Temperature Range for SAE Viscosity Numbers

Temperature		°C	-30 -20 -10 0 10 20 30 40 50
		(°F)	-10 0 20 40 60 80 100 120
Petrol Engine Oil	1.0 T-GDI (Europe only)		20W-50 / 15W-40 / 10W-30 / 0W-30, 5W-30, 5W-40
	1.0L MPI 1.2L MPI	B *1	20W-50 / 15W-40 / 10W-30 / 0W-20, 0W-30, 5W-20, 5W-30
		C *2	20W-50 / 15W-40 / 10W-30 / 0W-30, 5W-30, 5W-40

*1 : For EUROPE, AUSTRALIA AND NEW ZEALAND, CENTRAL & SOUTH AMERICA, CHINA
For Fuel economy, it is recommended to use the engine oil of a viscosity grade SAE 0W-20(API SN, ACEA C2). However, if the engine oil is not available in your country, select the proper engine oil using the engine oil viscosity chart.

*2 : For INDIA, MIDDLE EAST, IRAN, LIBIA, ALGERIA, SUDAN, MOROCCO, TUNISIA, EGYPT
For Fuel economy, it is recommended to use the engine oil of viscosity grade SAE 5W-30(API service SM or above, API service CJ-4 or above, ILSAC GF5 or above, ACEA A5/B5). However, if the engine oil is not available in your country, select the proper engine oil using the engine oil viscosity chart.

VEHICLE IDENTIFICATION NUMBER (VIN)

■ Type A

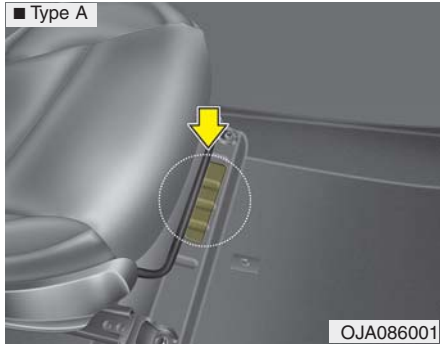

The vehicle identification number (VIN) is the number used in registering your car and in all legal matters pertaining to its ownership, etc.

The number is punched on the floor under the driver or passenger seat. To check the number, remove the cover.

■ Type B (if equipped)

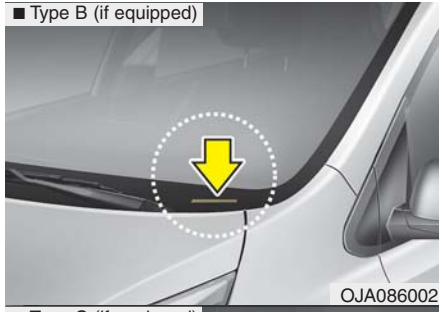

■ Type C (if equipped)

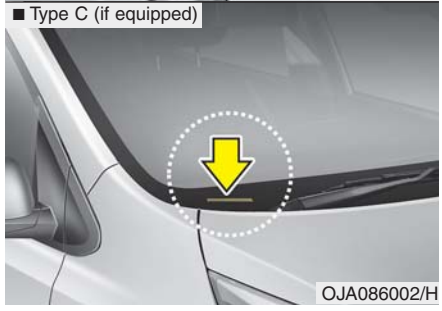

VIN label

The VIN is also on a plate attached to the top of the dashboard. The number on the plate can easily be seen through the windscreen from outside.

VEHICLE CERTIFICATION LABEL (IF EQUIPPED)

■ Type A (if equipped)

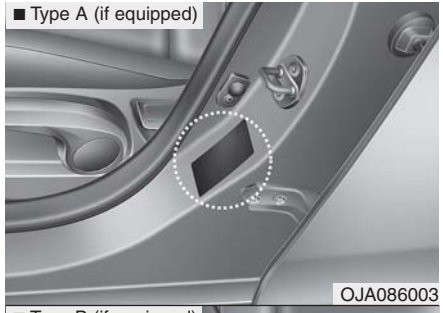

■ Type B (if equipped)

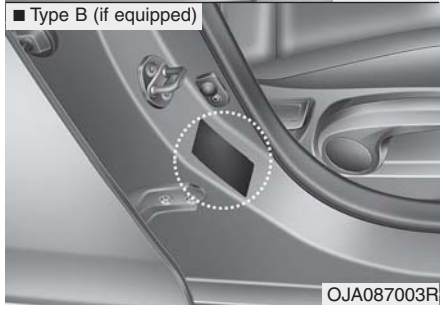

The vehicle certification label attached on the driver's (or front passenger's) side centre pillar gives the vehicle identification number (VIN).

TYRE SPECIFICATION AND PRESSURE LABEL



The tyres supplied on your new vehicle are chosen to provide the best performance for normal driving.

The tyre label located on the driver's side centre pillar gives the tyre pressures recommended for your car.

ENGINE NUMBER

■ Petrol engine (1.0L MPI)

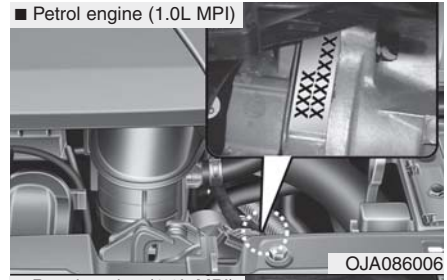

■ Petrol engine (1.2L MPI)

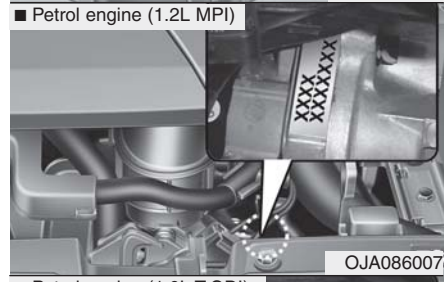

■ Petrol engine (1.0L T-GDI)

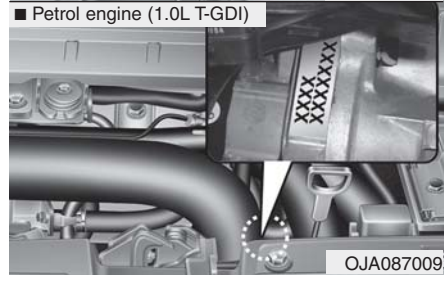

The engine number is stamped on the engine block as shown in the drawing.

AIR CONDITIONER COMPRESSOR LABEL

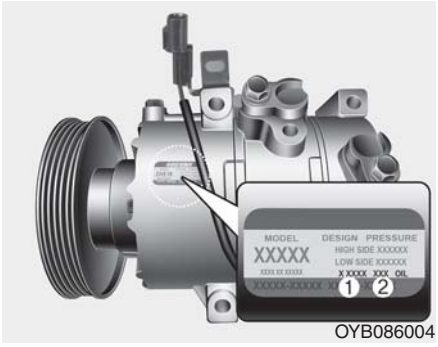

OYB086004

A compressor label informs you the type of compressor your vehicle is equipped with such as model, supplier part number, production number, refrigerant (1) and refrigerant oil (2).

REFRIGERANT LABEL



OJA086005

The refrigerant label is located on the underside of the bonnet.

DECLARATION OF CONFORMITY

■ Example

CE CE 0678

CE0678

The radio frequency components of the vehicle comply with requirements and other relevant provisions of Directive 1995/5/EC.

Further information including the manufacturer's declaration of conformity is available on Kia web site as follows;

http://www.kia-hotline.com

FUEL LABEL (IF EQUIPPED)

Petrol (Gasoline) engine

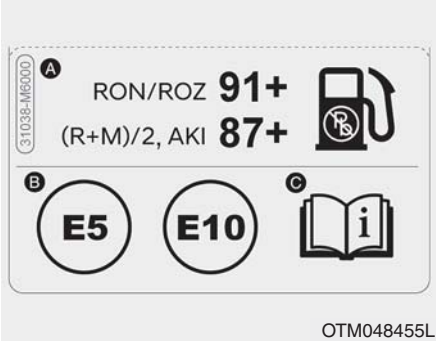

OTM048455L

The fuel label is attached on the fuel filler door.

A. Octane rating of unleaded Petrol (Gasoline)
   1) RON/ROZ : Research Octane Number
   2) (R+M)/2, AKI : Anti Knock Index

B. Identifiers for Petrol-type fuels
   ❊ This symbol means usable fuel. Do not use any other fuel.

C. For further details, refer to the “Fuel Requirement” in the chapter 1.

Index

A

Air bag - supplemental restraint system 3-46
Additional safety precautions 3-71
Air bag warning label 3-73
Air bag warning light 3-50
Curtain air bag 3-63
Driver's and passenger's front air bag 3-55
How does the air bag system operate 3-47
Inflation and non-inflation conditions of the air bag .. 3-65
Side air bag 3-61
SRS Care 3-70
SRS components and functions 3-52
Air cleaner (Kappa 1.0L MPI (Petrol, FFV), Kappa 1.2L MPI (Petrol)) 8-59
Filter replacement 8-59
Air cleaner (Kappa 1.0L T-GDI) 8-61
Filter replacement 8-61
Air conditioner compressor label 9-13
Air conditioning system 9-7
Appearance care 8-131
Exterior care 8-131
Interior care 8-137
Audio (Without Touch Screen) 5-7
Audio System 5-2
Antenna 5-2
AUX, USB port 5-3
How vehicle audio works 5-3
Automatic climate control system 4-115
Air Conditioning refrigerant label 4-125
Automatic heating and air conditioning 4-116
Checking the amount of air conditioner refrigerant and compressor lubricant 4-126
Climate control air filter 4-125
Manual heating and air conditioning 4-117
System operation 4-122
Automatic transaxle 6-27
Automatic transaxle operation 6-27
Good driving practices 6-32
Automatic transaxle fluid 8-54
Changing the automatic transaxle fluid 8-56
Checking the automatic transaxle fluid level 8-54

B

Battery 8-68
Battery capacity label 8-70
Battery recharging 8-70
For best battery service 8-68
Reset items 8-71
Before driving 6-4
Before entering vehicle 6-4
Before starting 6-4
Necessary inspections 6-4
Bonnet 4-32
Bonnet open warning 4-33

Closing the bonnet 4-33
Opening the bonnet 4-32
Brake system.....6-34
Anti-lock brake system (ABS).....6-38
Electronic Stability Control (ESC) 6-41
ESS : Emergency Stop Signal 6-47
Good braking practices 6-47
Hill-start assist control (HAC) 6-45
Parking brake 6-36
Power brakes 6-34
Vehicle stability management (VSM) 6-45
Brake/clutch fluid 8-52
Checking the brake/clutch fluid level 8-52
Bulb wattage 9-4

C

Child restraint system (CRS) 3-31
Installing a Child Restraint System (CRS) 3-34
ISOFIX anchorage and top-tether anchorage (ISOFIX anchorage system) for children 3-35
Selecting a Child Restraint System (CRS) 3-32
Climate control air filter 8-63
Filter inspection 8-63
Cruise control system 6-49
Cruise control switch 6-50
To cancel cruise control 6-53
To decrease the cruising speed 6-53
To increase cruise control set speed 6-52
To resume cruising speed at more than approximately 30 km/h (20 mph) 6-54
To set cruise control speed.....6-51
To temporarily accelerate with the cruise control on ..6-53
To turn cruise control off 6-54

D

Declaration of Conformity 9-13
Declaration of conformity 5-39
ANATEL for Brazil 5-41
CE for EU 5-39
IFETEL 5-42
NCC for Taiwan.....5-40
Defroster 4-103
Rear window defroster.....4-103
Dimensions 9-3
Door locks.....4-19
Child-protector rear door lock 4-23
Impact sensing door unlock system.....4-22
Operating door locks from inside the vehicle 4-20
Operating door locks from outside the vehicle 4-19
Speed sensing door lock system 4-22

E

Economical operation 6-69

Emergency Commodity 7-49
Fire extinguisher 7-49
First aid kit 7-49
Triangle reflector 7-49
Tyre pressure gauge 7-49
Emergency starting 7-5
Jump starting 7-5
Push-starting 7-7
Emission control system 8-140
Crankcase emission control system 8-140
Evaporative emission control system 8-140
Exhaust emission control system 8-141
Engine 9-2
Engine compartment 2-6, 8-4
Engine coolant (Kappa 1.0L MPI (Petrol, FFV), Kappa 1.2L MPI) 8-44
Changing the coolant 8-47
Checking the coolant level 8-44
Engine coolant (Kappa 1.0L T-GDI) 8-48
Changing the coolant 8-51
Checking the coolant level 8-48
Engine number 9-12
Engine oil 8-42
Changing the engine oil and filter 8-43
Checking the engine oil level 8-42
ENGINE START/STOP button 6-10
Cold start support system (Flex fuel vehicle, for Brazil and Paraguay) 6-17
ENGINE START/STOP button position 6-10
Illuminated ENGINE START/STOP button 6-10
Starting the engine 6-14
Stopping the Engine 6-16
Explanation of scheduled maintenance items 8-38
Exterior overview 2-2

F

Fuel filler lid 4-35
Closing the fuel filler lid 4-36
Opening the fuel filler lid 4-35
Petrol reservoir in the engine room (Flex fuel vehicle, for Brazil and Paraguay) 4-36
Fuel label 9-14
Petrol (Gasoline) engine 9-14
Fuel requirements 1-3
Petrol engine 1-3
Fuses 8-84
Engine compartment fuse replacement 8-88
Fuse/relay panel description 8-90
Inner panel fuse replacement 8-87

H

How to use this manual 1-2

I

If the engine overheats 7-8
If the engine will not start 7-4
If engine doesn't turn over or turns over slowly 7-4
If engine turns over normally but does not start 7-4
If you have a flat tyre (with spare tyre) 7-14
Changing tyres 7-16
EC Declaration of Conformity for Jack.....7-24
Jack and tools.....7-14
Jack label 7-23
Removing and storing the spare tyre 7-15
If you have a flat tyre (with Tyre Mobility Kit) (Type A) 7-25
Checking the tyre inflation pressure 7-30
Components of the Tyre Mobility Kit (TMK).....7-27
Distributing the sealant 7-29
Introduction 7-26
Notes on the safe use of the Tyre Mobility Kit 7-31
Technical Data 7-32
Using the Tyre Mobility Kit 7-28
If you have a flat tyre (with Tyre Mobility Kit) (Type B) 7-33
Checking the tyre inflation pressure 7-40
Components of the Tyre Mobility Kit (TMK).....7-36
Distributing the sealant 7-40
Introduction 7-34
Notes on the safe use of the Tyre Mobility Kit 7-42
Technical Data 7-43
Using the Tyre Mobility Kit 7-37
In case of an emergency whilst driving 7-3
If engine stalls whilst driving 7-3
If the engine stalls at a crossroad or crossing 7-3
If you have a flat tyre whilst driving 7-3
Instrument cluster 4-51
Gauges 4-53
Instrument Cluster Control 4-52
LCD Window Control 4-53
Transaxle Shift Indicator 4-57
Instrument panel overview 2-5
Interior features.....4-135
Ashtray.....4-135
Cigarette lighter 4-135
Clothes hanger 4-142
Cup holder 4-136
Digital clock.....4-140
Floor mat anchor(s) 4-141
Power outlet 4-139
Seat warmer 4-137
Shopping bag holder 4-142
Sunvisor 4-137
Interior light 4-101
Luggage room lamp.....4-102
Map lamp/Room lamp 4-101
Vanity mirror lamp.....4-102
Interior overview.....2-4

ISG (Idle Stop and Go) system 6-18
Auto start 6-19
Auto stop 6-18
Condition of ISG system operation 6-20
ISG system deactivation 6-21
ISG system malfunction 6-21

K

Key positions 6-6
Cold start support system
(Flex fuel vehicle, for Brazil and Paraguay) 6-9
Ignition switch position 6-6
Starting the engine 6-7
Stopping the Engine 6-9
Keys 4-4
Immobiliser system 4-5
Key operations 4-4
Record your key number 4-4

L

LCD Windows 4-58
LCD Modes (for type B cluster) 4-63
Over view 4-58
Service Mode 4-64
Trip information (Trip computer) 4-58
User Settings Mode (for type B cluster) 4-64
Light bulbs 8-105
Back-up lamp bulb replacement 8-119
Bulb replacement precaution 8-105
DRL (Bulb type) bulb replacement 8-114
Front fog lamp bulb replacement 8-113
Front turn signal lamp bulb (LED type) replacement ..8-113
Front turn signal lamp bulb replacement
(Headlamp Type A) 8-111
Glove box lamp bulb replacement 8-123
Headlamp (Low/High beam) bulb replacement
(Headlamp Type B) 8-112
Headlamp (Low/High beam) bulb replacement
(Headlamp Type A) 8-109
Headlamp and front fog lamp aiming (for Europe)..8-124
High mounted stop lamp bulb replacement 8-120
License plate lamp bulb replacement 8-121
Light bulb position (Front) 8-107
Light bulb position (Rear) 8-108
Light bulb position (Side) 8-109
Map lamp bulb replacement 8-121
Position lamp + DRL (LED type) bulb replacement..8-114
Position lamp bulb replacement
(Headlamp Type A) 8-110
Rear fog lamp bulb replacement 8-120
Rear turn signal lamp bulb replacement 8-117
Room lamp bulb replacement 8-122
Side repeater lamp (bulb type) bulb Replacement....8-115
Side repeater lamp (LED type) bulb Replacement ..8-115

Stop and tail lamp (LED type) bulb replacement 8-119
Stop and tail lamp bulb replacement 8-116
Tailgate room lamp bulb replacement 8-124
Vanity mirror lamp bulb replacement 8-122
Lighting.....4-88
Battery saver function 4-88
Daytime running light 4-95
Front fog light 4-93
Headlight escort function.....4-88
Headlight levelling device 4-95
Headlight welcome function 4-88
High beam operation 4-91
Lighting control 4-89
Rear fog light 4-94
Turn signals and lane change signals.....4-92

M

Maintenance services 8-7
Owner maintenance precautions 8-7
Owner's responsibility 8-7
Manual climate control system.....4-104
Air Conditioning refrigerant label 4-113
Checking the amount of air conditioner refrigerant and compressor lubricant.....4-113
Climate control air filter 4-112
Heating and air conditioning 4-105
System operation 4-110
Manual transaxle.....6-23
Good driving practices.....6-25
Manual transaxle operation 6-23
Mirrors 4-47
Inside rearview mirror 4-47
Outside rearview mirror.....4-48

O

Owner maintenance 8-9
Owner maintenance schedule 8-9

P

Parking brake 8-58
Checking the parking brake.....8-58

R

Radar type Autonomous Emergency Braking 6-58
AEB warning message and system control 6-60
Brake operation 6-61
Limitation of the system 6-65
Sensor to detect the distance from the vehicle in front (front radar) 6-62
System malfunction 6-63
System setting and activation 6-58

Rear parking assist system 4-83
Non-operational conditions of rear parking assist system 4-84
Operation of the rear parking assist system.....4-83
Rear parking assist system precautions 4-85
Self-diagnosis.....4-86
Rearview camera.....4-87
Recommended lubricants and capacities 9-8
Recommended SAE viscosity number 9-10
Refrigerant label 9-13
Remote keyless entry 4-8
Battery replacement 4-10
Remote keyless entry system operations 4-8
Transmitter precautions 4-9
Road warning 7-2
Hazard warning flasher 7-2

S

Scheduled maintenance service 8-11
Scheduled maintenance service precaution 8-11
Seat belts.....3-16
Care of seat belts 3-30
Pre-tensioner seat belt 3-24
Seat belt precautions 3-27
Seat belt restraint system 3-16
Seats 3-2
Front seat adjustment.....3-6
Headrest 3-7
Rear seat adjustment 3-11
Seatback pocket 3-10
Smart key 4-12
Smart key functions 4-12
Smart key precautions 4-13
Special driving conditions 6-71
Driving at night 6-73
Driving in flooded areas 6-74
Driving in the rain 6-73
Driving off-road 6-74
Hazardous driving conditions 6-71
Highway driving 6-75
Rocking the vehicle 6-71
Smooth cornering.....6-72
Speed limit control system 6-55
Speed limit control switch 6-55
To set speed limit 6-55
To turn off the speed limit control 6-57
Steering wheel 4-44
Electric power steering 4-44
Heated steering wheel 4-45
Horn 4-46
Tilt steering 4-45

Storage compartments 4-131
Centre console storage 4-131
Glove box 4-132
Increase cargo space 4-134
Luggage board 4-133
Luggage net holder 4-132
Sunroof 4-39
Resetting the sunroof 4-43
Sliding the sunroof 4-40
Sunroof open warning 4-43
Sunshade 4-42
Tilting the sunroof 4-41

T

Tailgate 4-24
Closing the tailgate 4-25
Opening the tailgate 4-24
Theft-alarm system 4-15
Armed stage 4-15
Disarmed stage 4-17
Theft-alarm stage 4-17
Towing 7-44
Emergency towing 7-45
Removable towing hook 7-45
Towing service 7-44
Tyre Pressure Monitoring System (TPMS) 7-9
Tyre specification and pressure label 9-12
Tyres and wheels 9-5
Tyres and wheels 8-72
Checking tyre inflation pressure 8-73
Low aspect ratio tyre 8-82
Recommended cold tyre inflation pressures 8-72
Tyre care 8-72
Tyre maintenance 8-78
Tyre replacement 8-76
Tyre rotation 8-74
Tyre sidewall labeling 8-78
Tyre traction 8-78
Wheel alignment and tyre balance 8-75
Wheel replacement 8-77

V

Vehicle break-in process 1-6
Vehicle certification label 9-11
Vehicle identification number (VIN) 9-11
Vehicle weight 6-81
Base kerb weight 6-81
Cargo weight 6-81
GAW (Gross axle weight) 6-81
GAWR (Gross axle weight rating) 6-81
GVW (Gross vehicle weight) 6-81
GVWR (Gross vehicle weight rating) 6-81
Overloading 6-81
Vehicle kerb weight 6-81

W

Warning and indicator lights....4-71
Indicator Lights....4-78
Warning lights....4-71
Washer fluid....8-57
Checking the washer fluid level....8-57
Weight/volume....9-7
Windows....4-26
Manual windows....4-31
Power windows....4-27
Windshield defrosting and defogging....4-128
Automatic climate control system....4-129
Defogging logic....4-130
Manual climate control system....4-128
Winter driving....6-76
Carry emergency equipment....6-80
Change to "winter weight" oil if necessary....6-79
Check battery and cables....6-79
Check spark plugs and ignition system....6-79
Don't let ice and snow accumulate underneath....6-80
Don't let your parking brake freeze....6-80
Snowy or icy conditions....6-76
To keep locks from freezing....6-80
Use approved window washer anti-freeze in system..6-80
Use high quality ethylene glycol coolant....6-79
Wiper blades....8-65
Blade inspection....8-65
Blade replacement....8-65
Wipers and washers....4-96
Heated washer nozzle....4-99
Rear window wiper and washer switch....4-99
Windscreen washers (front)....4-97
Windscreen wipers (front)....4-97